Copyright 2020 XingJi Electrical Apparatus Co.,Ltd .
All rights reserved.

兴机电器有限公司
XINGJI ELECTRICAL APPARATUS CO.,LTD

XING JI ELECTRICAL APPARATUS CO.,LTD.

Add: 58 Jixian Road, Louqiao Industrial Park,
Ouhai District, Wenzhou City.
Tel: 0577-88428983 88620237 88625541 88420889
Email: wxjxs@china-xj.com
Fax: 0577-88637969 88625542
http://www.china-xj.com

XING JI

ELECTRICAL APPARATUS
CO.,LTD

http://www.china-xj.com

Mid-Set High-Voltage Switchgear Accessories

兴机电器有限公司
XINGJI ELECTRICAL APPARATUS CO.,LTD

COMPANY INTRODUCTION

"Wenzhou Xingji Electrical Appliances Co., Ltd.", former Wenzhou Xinqiao Mechanical Equipment Factory, was founded in 1989. As a standing member of China Electrical Equipment Industry Association, we are specialized in the R&D, manufacturing, and sale of high, medium, and low-voltage electrical components and complete equipment accessories. After 20 years' continuous efforts and growth development, now we have established eight investment companies that recruit about 1800 employees.

Xingji Electrical Appliances has always kept pace with the times and insisted on sustainable development. To meet the market demand, we have adhered to "standardized, continuous, and institutionalized" management. We have stuck to the philosophy of "practicality and steady growth" and the quality management policy of "leading technology, standard management, superior quality, and customer satisfaction". On the path towards achieving "Xingji excellency", we have constantly provided Xingji employees with modern features and encouraged them to take up new challenges and create a brighter future.

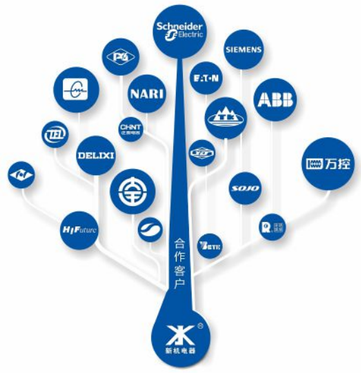

HONOR OF ENTERPRISE

www.china-xj.com

CONTENT

- Chassis truck 01-15
- Interlocking mechanism 16-25
- Flap Mechanism Device 26-34
- Guide (Interlocking) 35-37
- Accessries for KYN-61 switchgear 38-61
- Pushing Mechanism 62-72
- Earthingswitch 73-78
- Vacuumcircuitbreaker 79-80
- Insulating parts 81-106

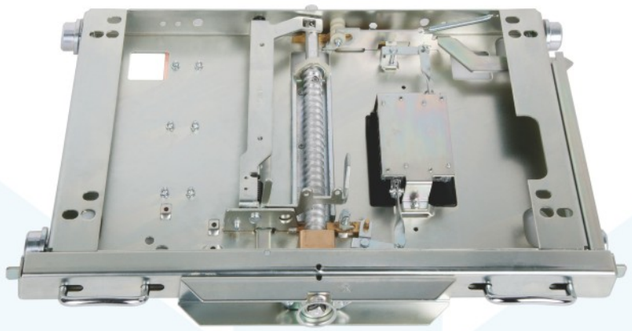

Normal Type Chssis Truck

Usage and function

Chassis truck has been used to mount circuit breaker,transformer and other components in the withdrawable switchgear,as auxiliary operation of components with bus-bar.When operation with internal mechanism of circuit breaker and other interlock mechanism of mid-placed cabinet,it can satisfy the interlock requirement of"5 preventions"stipulated inGB3906.The detail effect of handcart interlock as follow:

1.Only when the handcart is under testing/isolating or working position,the circuit breaker can make.After that,the handcart is under locked state,which avoids false connecting or making of the spacing contact.

2.When the handcart is under working position or away from testing/isolating position for 10mm,the earthing switch fails to make,avoided powered false making of the switch,

3.When the earthing switch makes,the handcart shall not shift from testing/isolating to working position,avoiding the switch closing the circuit breaker in making.

4.When the chassis enters cabinet,once away from testing/isolating position,the handcart fails to draw out from the cabinet.

Type meaning

DPC-□-□/□/□

- Extended Code
- Stroke Code : Standard Stroke 200mm(default) / 24KV General Stroke 300mm
- Cabinet Width : 550mm、650mm、800mm and 1000mm
- Design Number: 3、4、5
- Chassis Truck

Configuration and installation dimensions for DPC-4- Chassis Truck

型 号	A	B	C	D	E	F
DPC-4-650	500	450	410	385 Mounting hole 13X30	502	535
DPC-4-800	650	600	560	520	652	685
DPC-4-840	690	640	600	560	692	725
DPC-4-900	750	700	660	620	752	785
DPC-4-1000	850	800	760	720	852	885
DPC-4-1200	1050	1000	960	960	1052	1085

Note: There are 4 mounting holes in size 13×16 in DPC-4-800 Chassis Truck more than others.

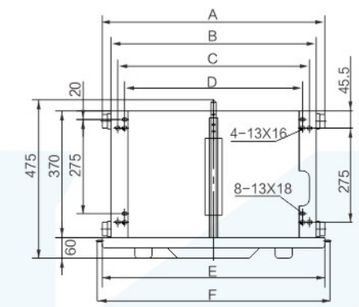

Configuration and installation dimensions for DPC-4-1000/T Chassis Truck

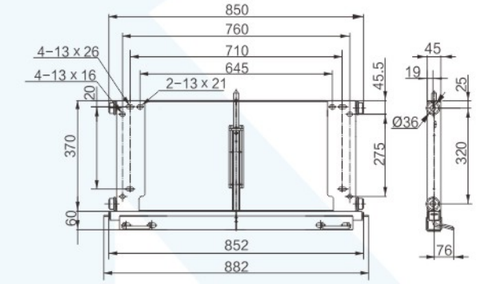

Configuration and installation dimensions for DPC-4--1000/T Chassis Truck

DPC-4-1000/24 Deepened 24KV Chassis Truck

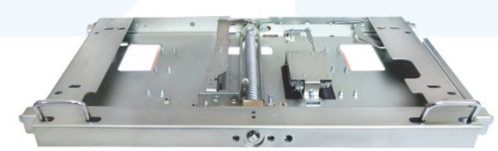

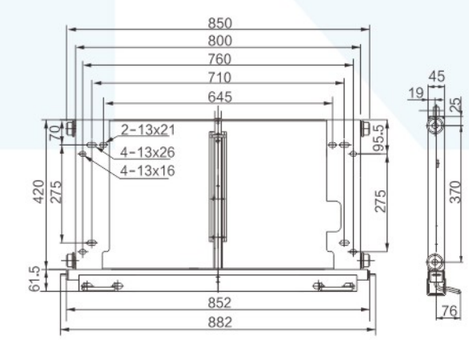

The deepened 24KV chassis truck has stroke of 300 with frame deepened by 50, and includes a guiding device.

24KV chassis truck not only has benefit to improve the properties of chassis truck, but also be able to stabilize the core of circuit Breaker .

Lock plate for Chassis Truck

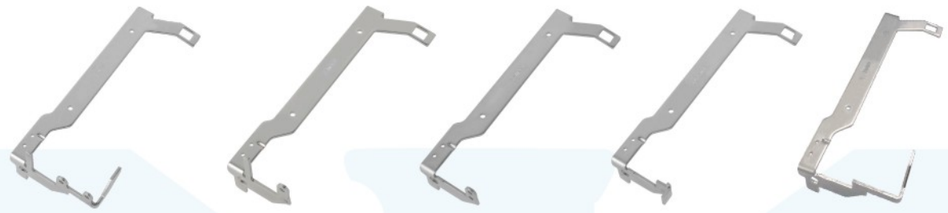

- 8XS.141.012
- 8XS.141.012.1
- 8XS.141.012.2
- 8XJ.141.050.2
- 8XS.141.012S(VS1+)

The handle

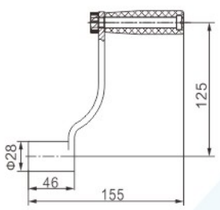

- Normal handle：5XS.253.013

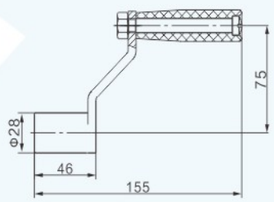

- Handle for lower-layer chassis truck：5XS.253.013. 4

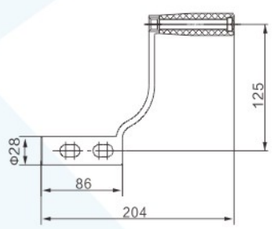

- Elongated handle：5XS.253.013. 6/WK

If you need lower-side all-direction handle, please note

Chassis truck earthing methods

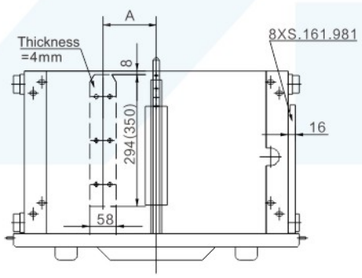

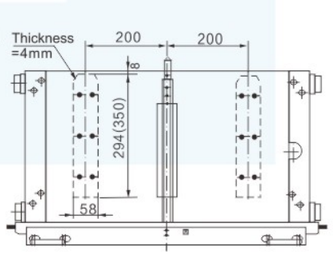

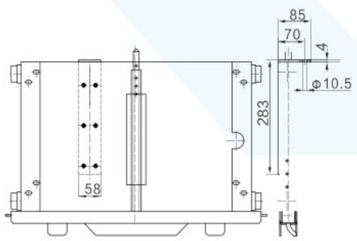

Code	A
DPC-□-650	100
DPC-□-800	160

- Note:The numbers in brackets are the dimensions of 24KV DPC-□-1000 Chassis Truck
- 7 shape Earthing bar
- Earthing bar DPC.8XJ.588.001.51/CZZ
- Please give clear indication for the earthing bar when ordering.

Earthing contactor

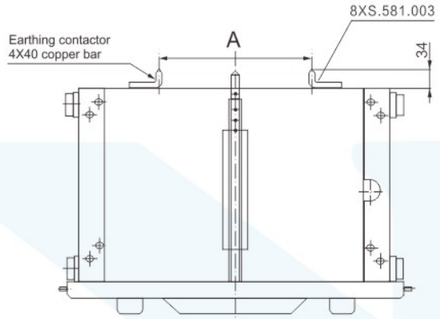

Code	A
DPC-□-650	180
DPC-□-800	296
DPC-□-1000	496

Earthing Clamp

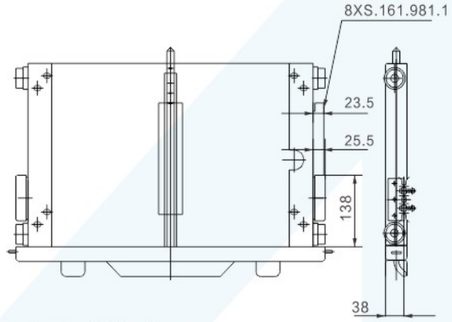

- Earthing clamp installation diagram
- Note: In a interlock system, the value of guide rail would fluctuate according to earthing clamp matched with copper guide rail or aluminum guide rail.

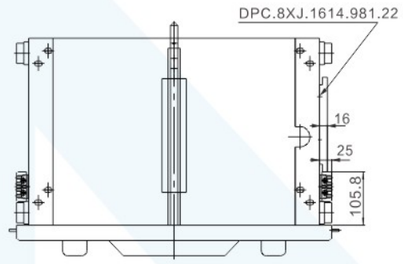

- Smaller earthing clamp

JX(VEP Earthing clamp)
- DPC.5XJ.577.005

J(VD4 Earthing clamp)
- 5WXJ.577.001

JD(Short time withstand current grounding clamp)
- DPC.5XJ.577.001.10/JD

J/24(VD4 Earthing clamp 24kV)
- DPC.5XJ.577.001.3

DPC-4-800/VD4

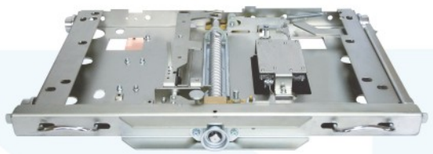

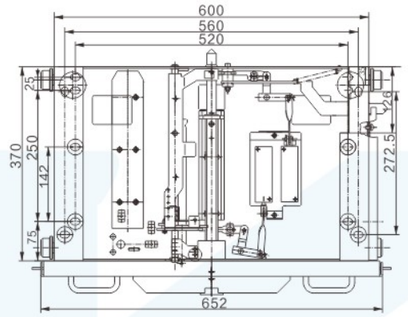

DPC-4-800/VEP

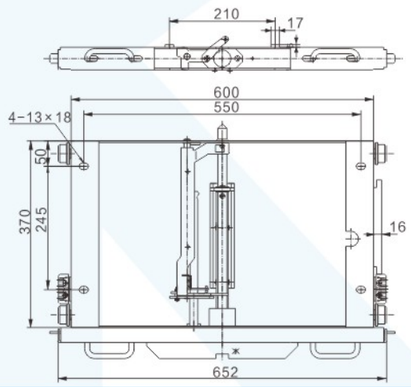

DPC-4-800/XC2(used for lower-layer)

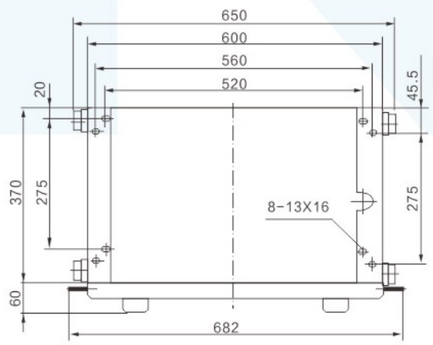

■ Configuration and installation dimensions for DPC-4--800/XC2 Chassis Truck

DPC-4- 800/1000 /YDF Deepened

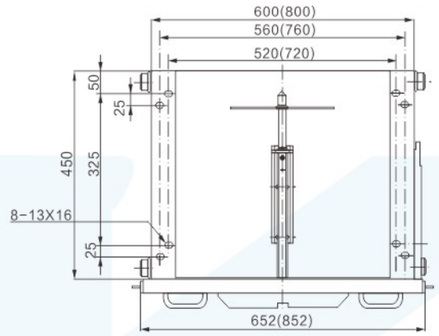

■ Note: The numbers in brackets are the dimensions of 1000 mm Width Chassis Truck.

DPC-4-800/YH3 Deepened

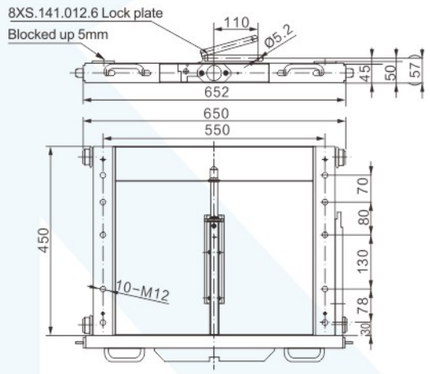

DPC-4-1000/YH3

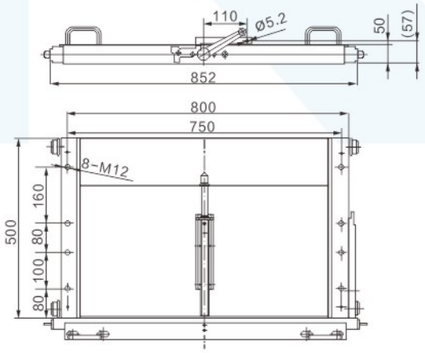

■ Note:

1.The deepened Chassis can be used for 3AH; ZN12; ZN28; ZN65 etc, fixed circuit breaker modified to draw out.

2.DPC-4- /YH3 with 8XS.141.012.6 lock plate, Please when ordering if you need other lock plate.

Centrally Installed chassis truck

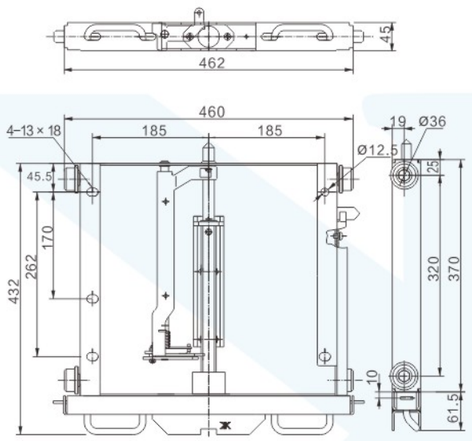

DPC-max-550(V-maxChassis truck)

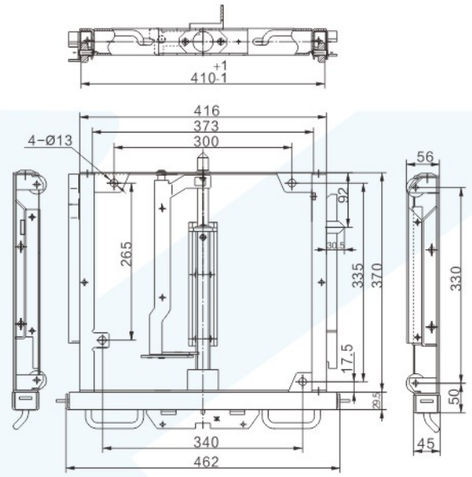

DPC-4-$^{800}_{1000}$/JY Inspection truck

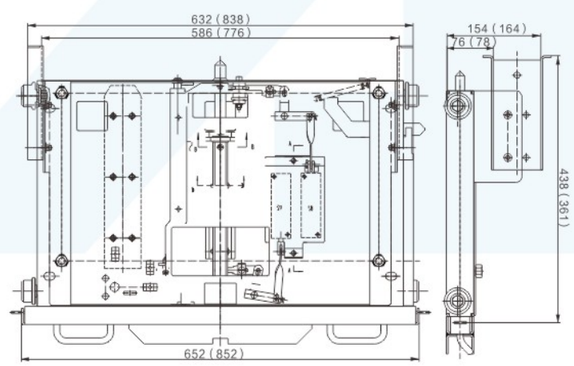

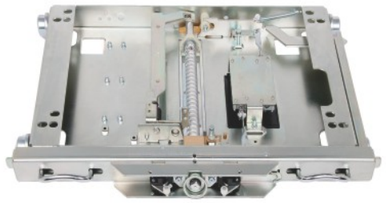

DPC-4-800/S5Chassistruck (Modularpatentedproduct)

■ Moto of interlocking S5

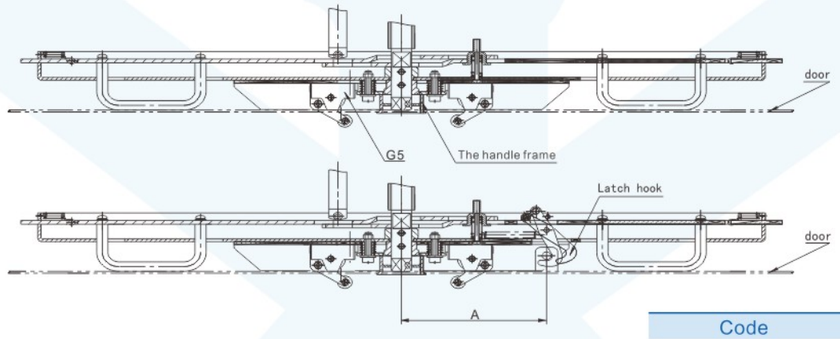

Code	A
DPC-□-650/S5	101
DPC-□-80(1000)0/S5	130

The interlocking function of the cabinet of chassis truck

a. DPC-□-□/G5 Chassis truck

This type is only added the function of closing the door, It means that when the door is open, it won't allow the operator to switch the chassis truck with handle. only if the door is closed, it is able to use. It don't need the change of the door of the cabinet to fit this function.

b. DPC-□-□/S5 Chassis truck

It add the function of door-locking in the base of a, which means that when the hand shaft is out of the testing position, the door will be locked, and it can't be open, only if it is in the position of the testing, the door can be opened. The door of the cabinet need changing to fit the function.

■ Note: the structure of interlocking is similar to the /S, no big difference in the outlook, and adopt the structure of mold which is easy to change and install.

A :

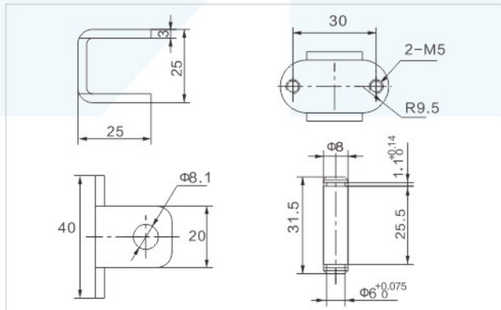

B :

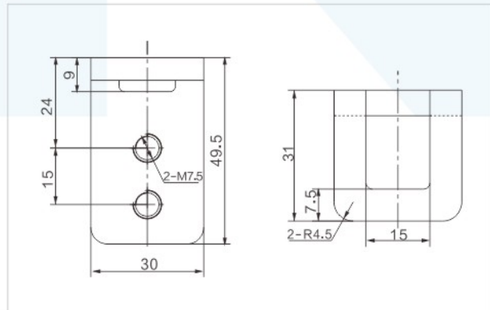

Chassis truck

Special chassis truck: DPC-□-□/2J1 Chassis Truck with interlock device

Configuration and installation dimensions diagram

Method one: Vertical installation

Users don't need to open a hole on the cabinet, but need to make the door open.

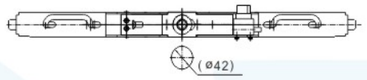

Method two: horizontal installation

Users need to make the door open, but don't need to open a hole on the cabinet.

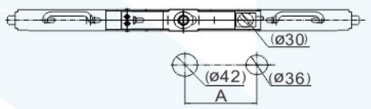

Two Chassis Trucks with interlock function

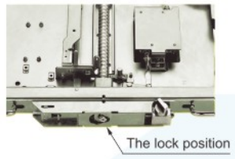

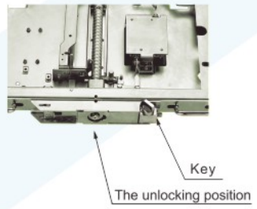

Introduction:

This interlock device is used to prevent two chassis trucks from being on the operating location at same time. The main function of interlocking: two chassis trucks are controlled by only one key, if one of the chassis trucks is being on the operating location, the key can't be taken out, and another chassis truck has no key to unlock, the handle can't be put in and the chassis truck can't shake, so it can achieve the purpose of avoid them to be on operating location.

Order Notice:

1. If you need this interlock device, please add /2J1(or 3J2) following the normal type. A set of this type chassis truck contains two chassis truck and one key.
2. When ordering, please give clear indication that whether installed vertically or horizontally.

Code	A
DPC-□-650/2J1	91
DPC-□-800(1000)/2J1	121

DPC-4-800/SHS/1J1 Withdoubleprograminterlockchassistruck

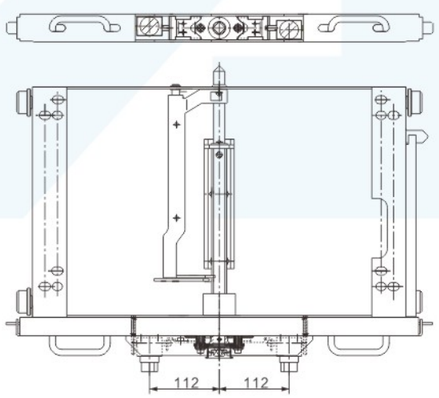

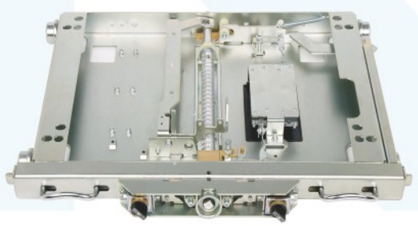

Cupboard door opening

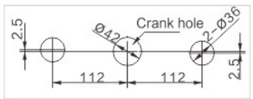

Chassis truck wiring diagram

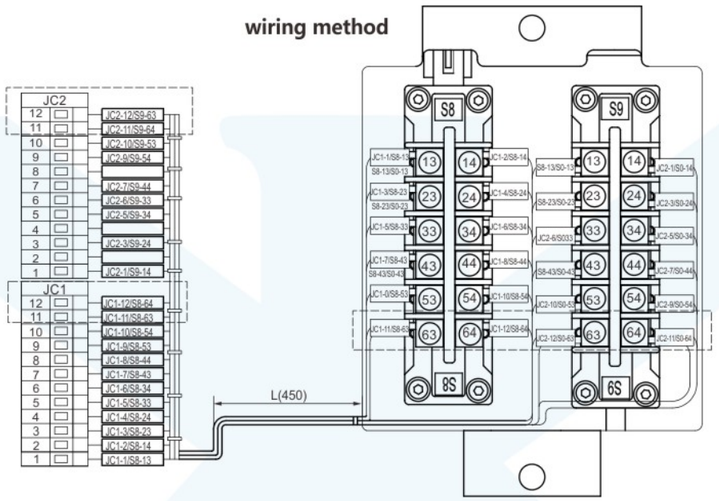

SCH

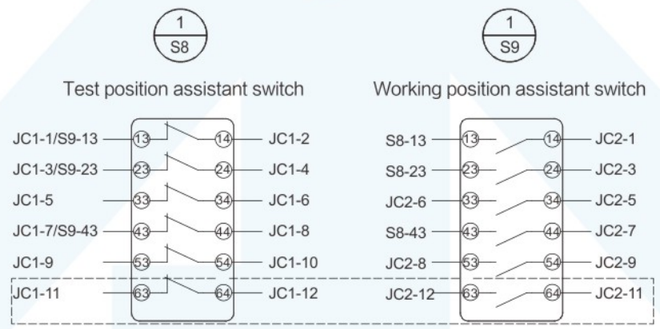

Chassis wiring overview:

1.Chassis in the test position, the S8/S9 can be based on customer requirements;

2.Wiring terminal according to the choice of customer or provided by the customer;

3.The wiring mark can be adjusted by the customer;

4.The figure shows our standard wiring. Customers can communicate with us if they have other requirements.

Regular assistant switch S8/S9	JC1/JC2	Cable marker	Length(mm) standard length450
5050	20P(1~10)Dotted position no connection	According to customer require	More than 200, as require.
6060	24P(1~12)Dotted position connect	According to customer require	More than 200, as require.

Terminal strip chose JC (socket and plug)	Terminal strip chose JX	Assistant switchS8/S9	Terminal strip select JC or JZ
YC101-5.08-10P(Oftengauge)	3DZ.01.00.010(20P)	5050 or 6060	Wiringaccordingtocustomerrequire.
YC101-5.08-12P(Oftengauge)	3DZ.01.00.010(24P)	6060	

FK10-I-60
Assistant switch

FK10-Ⅱ-60
Assistant switch

FK10C-I-60
Assistant switch

Type meaning

FK10-□-□□

- Normal closed contact number
- Normal opened contact number
- Type code: Ⅰ contact with connecting rod(for chassis truck S8,9); Ⅱ contact without connecting rod (for earthing switch interlock)
- Design number
- Assistant switch

FK10-I- □□

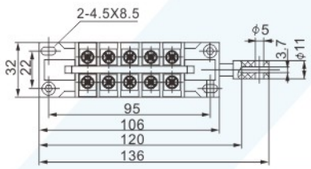

■ 5 groups contact

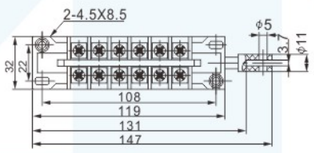

■ 6 groups contact

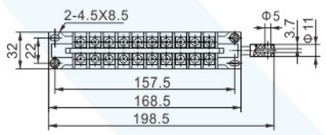

■ 10 groups contact

FK10-II-□□

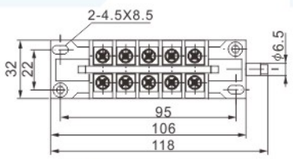

■ 5 groups contact

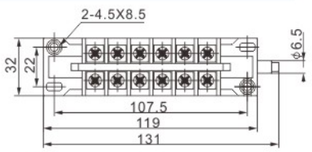

■ 6 groups contact

兴机电器
XINGJI ELECTRICAL

Electric Chassis truck

Introduction of electric chassis truck

Electric chassis truck has been added a function that it can be operated with electric based on manual chassis truck. It has the same size with manual chassis truck. In order to achieve intelligent, programmatic and remote control, it is a necessary component. Over the years Electric Chassis Truck has developed to the fourth-generation mixed type from the first-generation. It can match with micro permanent-magnet DC machine since the third-general. Furthermore, making full use of space, electric chassis will not change the size and the function after matched with micro permanent-magnet DC machine. If you want to purchase electric chassis truck, please add /DD3 or DD4 after type code when ordering.

Type meaning

DPC-□ / DD□

- Design Number:3, 4, 5
- Electric mechanism
- Manual chassis truck code

Electric Chassis Truck (Manual First) S

Presentation:

Description: Based on the original electrical chassis truck, this kind of chassis truck has an additional function of Manual First. With the micro switch connecting the operation hole of the handle. When the handle in it, the motor can not control the chassis truck. If you need this function. Just add DPC- /DD4S based on the chassis truck DPC- /Dd4

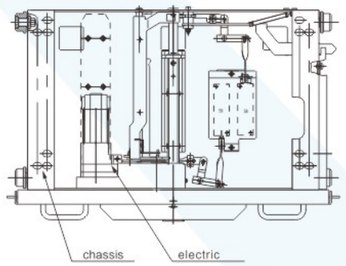

lectric Chassis truck (Gear version/Patented product)DPC-□-□/DD5

Presentation:

This chassis is a new type, with gear structure and motor design.The chassis has a simple appearance; artistic; Reduce the transmission box structure, electric part space is smaller; More conducive to quality control, integrated with the motor single component control.

Structural advantages:

1. Electric and manual conversion clutch release is easier;
2. Chassis dimensions are the same as manual chassis, no need to change the frame

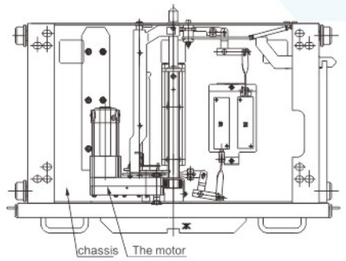

Control Module of DD-2B+ Electric Chassis Truck

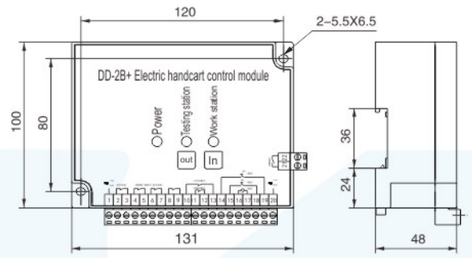

- DD-2B+ is an upgraded control module and has the same interface as the earlier versions, such as DD-1, DD-2A, DD-2B. It has advantages of soft-starting, cost-effective.

Elementary diagram DD-2B+

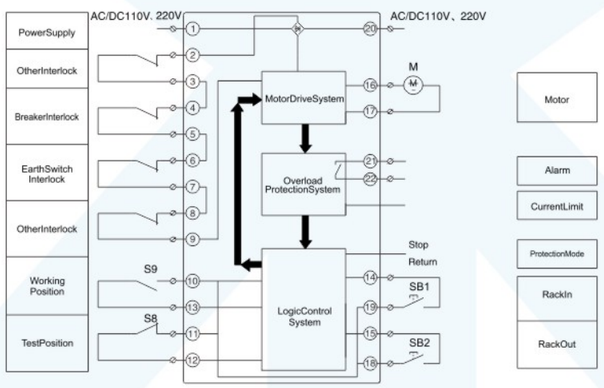

Control Module of DD-3A Electric Chassis Truck

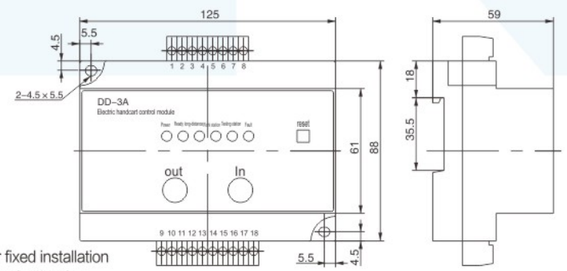

- The installation way: in the cabinet DIN35mm stuck or fixed installation
- Note: It is able to assemble with communication port, please give us your requirement if you need it

Elementary diagram DD-3A

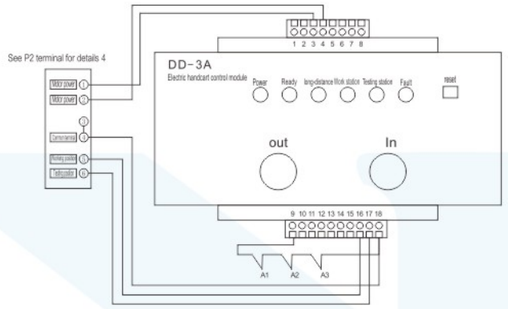

220V
1 Power +
2 Power −
3 Motor+
4 Motor−
5, 6 Fault output
7 Local/remote control
8 Remote rese
9 Circuit breaker interlock
10 Earthing switch interlock
11 Standby interlock
12 Local In
13 Local Out
14 Remote In
15 Remote Out
16 Working position
17 Testing position
18 Common Terminal

A1 Back door closed position switch
A2 A3 Circuit breaker assistant switch, manual priority Switch

Control Module of DD-3B Electric Chassis Truck

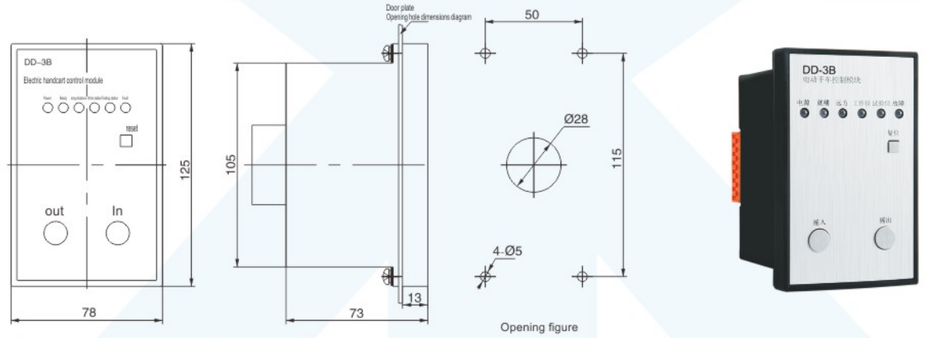

- Installation: cabinet door fixed installation
- Note: communication interface can be provided, please specify when ordering.

Elementary diagram DD-3A or DD-3B

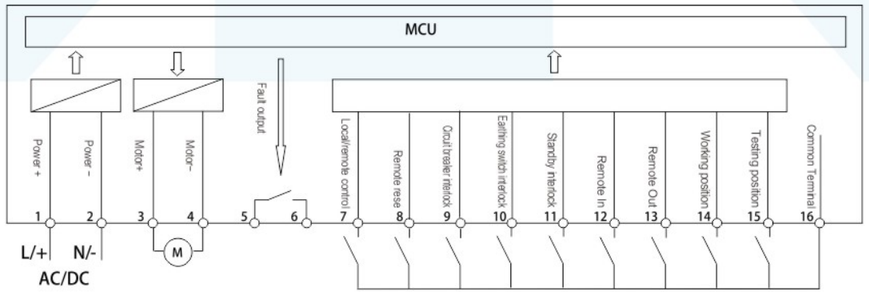

Chassis truck

Control Module of DD-3C-V Electric Chassis Truck

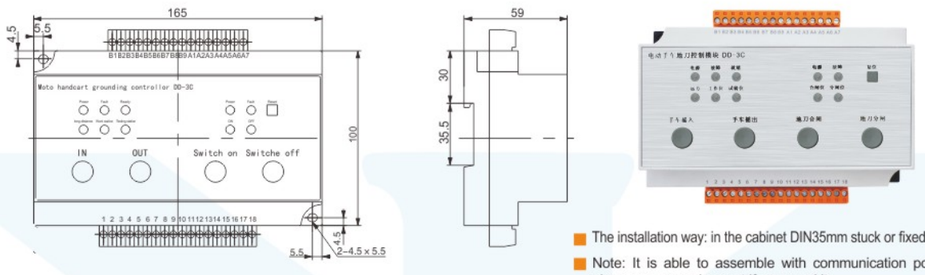

- The installation way: in the cabinet DIN35mm stuck or fixed installation
- Note: It is able to assemble with communication port, please give us your requirement if you need it

Control Module of DD-3D-V Electric Chassis Truck

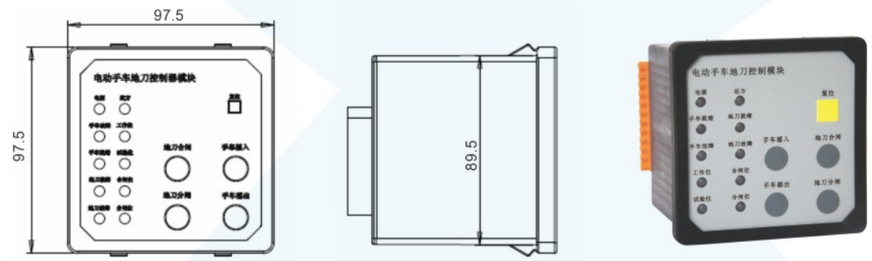

Elementary diagram DD-3C/DD-3D

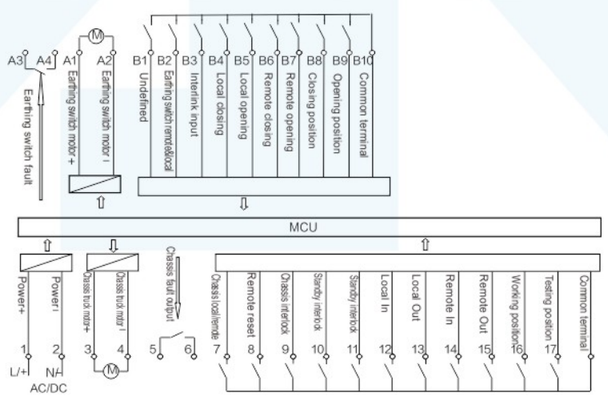

When operating the handcart, the ground cutter must be in the tripping position except the circuit breaker interlock condition and the standby interlock condition; The operation of the ground tool shall meet the interlock signal input conditions and the standby interlock conditions of the handcart part.

In addition: local/remote remote reset input is also applicable to the ground tool part.

Earthing switch operation mechanism interlock device(For arm drive operation) 5XS.363.010

Note: no backdoor reverse interlock.

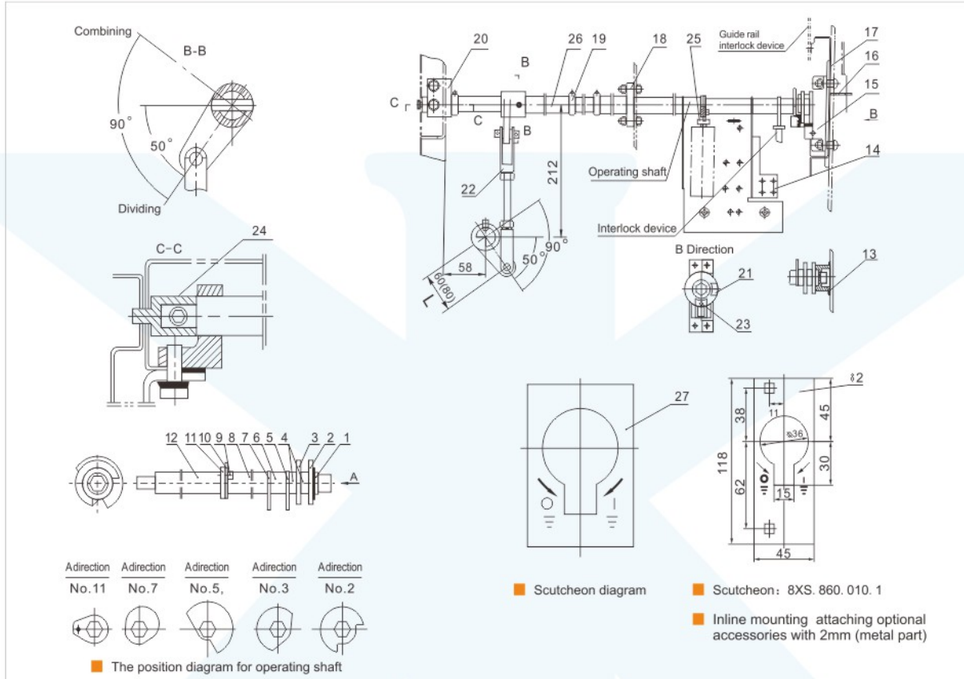

- Scutcheon diagram
- Scutcheon：8XS. 860. 010. 1
- Inline mounting attaching optional accessories with 2mm (metal part)
- The position diagram for operating shaft

Earthing switch operation mechanism interlock device(For arm drive operation) 5XS.363.010

No.	Item	Code	Qty
1	Bearing	8XS.263.011	1
2	Sector plate	8XS.192.010	1
3	Sector plate	8XS.192.011	1
4	Shaft sleeve	8XS.210.014.1	2
5	Sector plate	8XS.151.041	1
6	Shaft sleeve	8XS.211.061	1
7	Sector plate	8XS.151.039	1
8	Screw M5*12	8XS.211.062	1
9	Screw M5*12	GB70−85	1
10	Sector plate	8XS.151.042	1
11	Sector plate	8XS.151.043	1
12	Operating shaft	8XS.200.010.4 (1432 mach with 1500 deepened cabinet)	1
		8XS.200.010.5 (1590 mach with 1660 deepened cabinet)	

No.	Item	Code	Qty
13	Cover	8XS.017.011.1	1
14	Bending plate	8XS.161.058	1
		8XS.161.058.1(choose)	1
15	Support	8XS.043.022	1
16	Bending plate	8XS.161.059	1
17	Slide block	8XS.143.010	2
18	Shaft sleeve	8XS.211.058	1
19	Stop collar	8XS.211.057	3
20	Support	8XS.043.019	1
21	Close-lock instruction	8XS.866.010	1
22	Connecting rod assembly	8XS.233.030.1	1
		8XS.233.030.3（choose）	1
23	Sub-lock instruction	8XS.866.011	1
24	Lock sleeve	8XS.211.059	1
25	Slotting plate	8XS.151.044	1
26	Shaft sleeve	8XS.211.060	2
27	Scutcheon	8XS.860.010	1

Note: 1. No.22 has two sizes. Normal center distance is 60. If you want to order the center distance of 80, please refer to page 16 and specify when ordering.
2. If need emergency release function, No.24(lock sleeve) should change to 8XS.211.059.15/HK.

Earthing switch operation mechanism interlock device(For arm drive operation) 5XS.363.010.1

(With backdoor reverse interlock structure, cabinet precision requirements are higher)

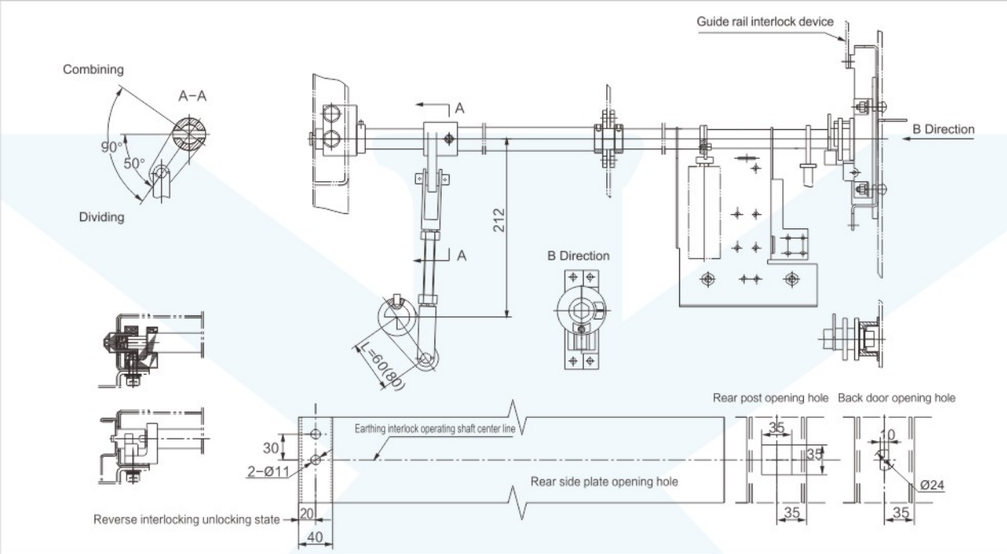

Earthing switch operation mechanism interlock device(For arm drive operation) 5XS.363.010.2

Reverse interlocking structure of back door, hole at rear of switchgear has been adjusted (as shown in the figure), reliable operation.

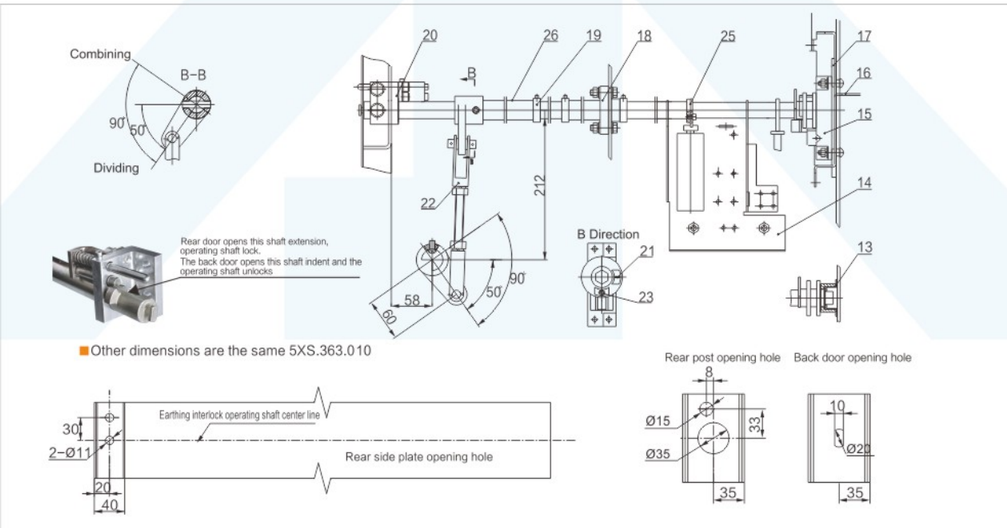

■Other dimensions are the same 5XS.363.010

■ Note: the electric operation structure should cooperate with our electric earthing switch or consult our technical department.

Earthing switch operation mechanism interlock device(For arm drive operation) 5XS.363.010.3

Backdoor standby interlocking structure (recommended), direct replacement for (5XS.363.010) reliable operation and easy installation.

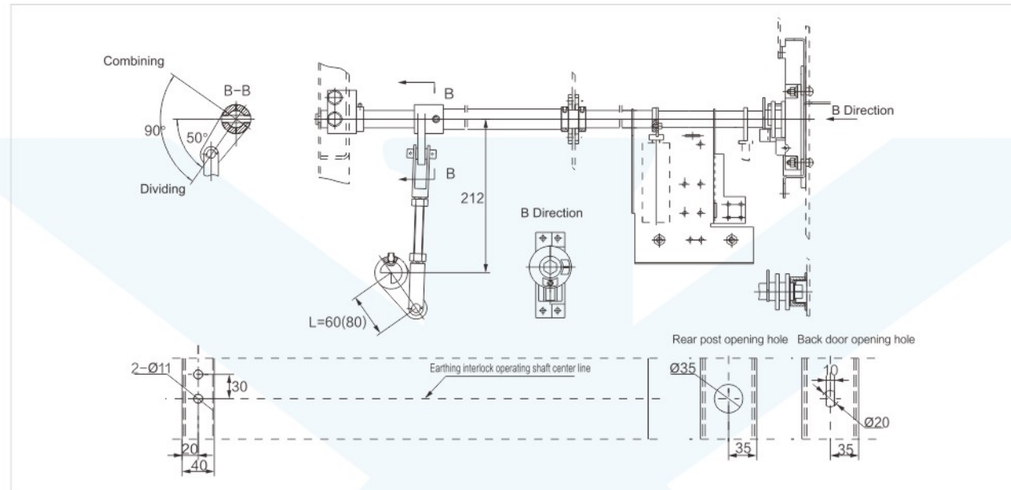

Description

This interlock device increases reverse interlock of the backdoor based on 5XS.363.010. After the backdoor(seal plate) is closed, the earthing switch can be operated.

The working principle of this interlock device is that when the backdoor (seal plate) is closed, the lock sleeve enters the cabinet square hole to relieve interlock with the support, so that the earthing switch can be operated.

When the earthing switch is closed and the backdoor is open, the pin shaft can be reset by spring force, and stretch out to lock the operating shaft, in order to prevent the earthing switch from breaking.

Structural advantage: This interlock device has the same function as 5XS.363.010.1, so users don't need to change any size of the cabinet for direct exchange with the holes of original 5XS.363.010, and only change original operating shaft and lock sleeve into the four components shown in the figure to realize anti-lock function of backdoor. This interlock device has better reliability, strength, convenient maintenance and replacement than 5XS.363.010.1.

When the backdoor is opened, this pin shaft stretches out and the operating shaft is locked.

When the backdoor is closed, this pin shaft retracts and the operating shaft is unlocked.

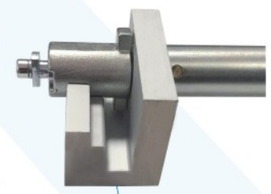

When the backdoor is opened, this pin shaft stretches out and the operating shaft is locked. When the backdoor is closed, this pin shaft retracts and the operating shaft is unlocked.

Earthing switch operation mechanism interlock device(For arm drive operation) 5XS.363.010.3

Name	No.	Item	Code	Qty	Interlock
5XS.363.010.3	1	Operating shaft	8XS.200.013.1(series)	1	Exist
	2	Pressure spring	8WXJ.282.201	1	
	3	Lock support	KYN.8XJ.043.148	1	
	4	Lock sleeve	KYN.5XJ.211.259	1	

■ Note: Except the above four components, others parts of 5XS.363.010.3 are same as 5XS.363.010(catalog page.016).

■ Note: the electric operation structure should cooperate with our electric earthing switch or consult our technical department.

Earthing switch operation mechanism interlock device(For arm drive operation)Split type KYN.5XJ.363.010.3/FT

Split type structure:Note: the distance between upper and bottom shaft can be adjusted according to customer's requirements. Please inform the installation method of earthing switch when ordering

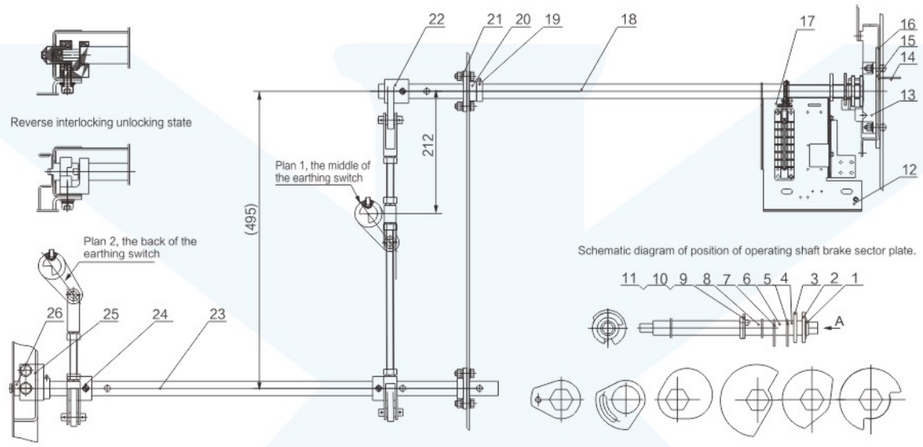

■ Note: Rear opening hole position same as 5xS.363.010.3 Kitting list

Earthing switch operation mechanism interlock device(For arm drive operation)Split type KYN.5XJ.363.010.3/FTKitting list

No.	Item	Code	Qty
1	Bearing	8XS.263.011	1
2	Sector plate	8XS.192.010	1
3	Sector plate	8XS.192.011	1
4	Shaft sleeve	8XS.210.014.1	2
5	Sector plate	8XS.151.041	1
6	Shaft sleeve	8XS.211.061	1
7	Sector plate	8XS.151.039	1
8	Shaft sleeve	8XS.211.062	1
9	Screw M5x12	GB/T 70.1-2000	1
10	Sector plate	8XS.151.042	1
11	Sector plate	8XS.151.043	1
12	Bending plate	8XS.161.058	1
13	Support	8XS.043.022	1

No.	Item	Code	Qty
14	Protecting cover	KYN.8XJ.211.362	1
15	Bending plate	8XS.161.059	1
16	Slide block	8XS.143.010	2
17	Slotting plate	8XS.151.044	1
18	Operating shaft	KYN.8XJ.200.013.219/LN	1
19	Stop collar	8XS.211.057	2
20	Shaft sleeve	KYN.8XJ.213.032.1/SAP	1
21	Shaft sleeve	KYN.8XJ.211.058.1	2
22	Connecting rod assembly	KYN.5XJ.233.030.24/TRD	1
23	Operating shaft	KYN.8XJ.200.013.220/LN	1
24	Connecting rod assembly	5XS.233.030.1	1
25	Support	KYN.8XJ.043.148	1
26	Lock sleeve	KYN.5XJ.211.259	1

■ Note: the electric operation structure should cooperate with our electric earthing switch or consult our technical department.

Earthing switch operation mechanism interlock device(For arm drive operation) KYN.5XS.363.010.4

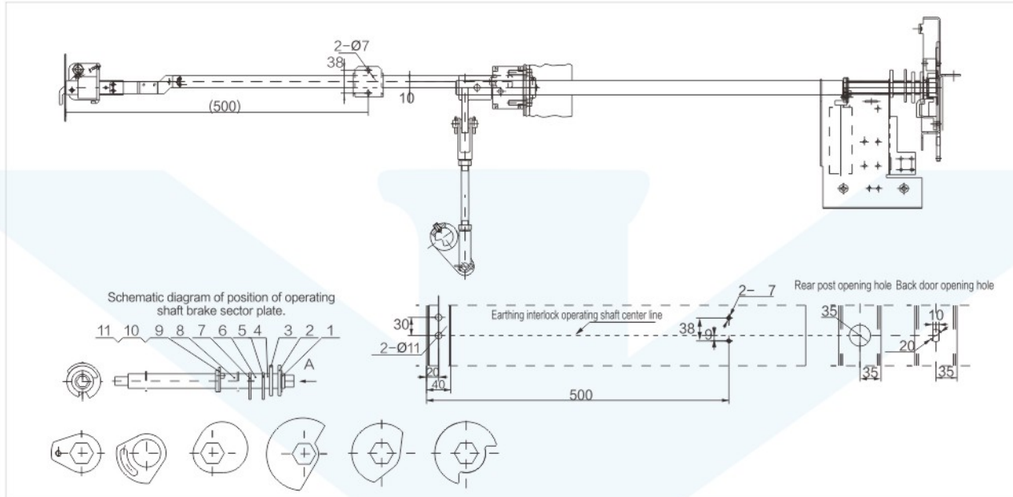

Earthing switch operation mechanism interlock device(For arm drive operation) KYN.5XS.363.010.5

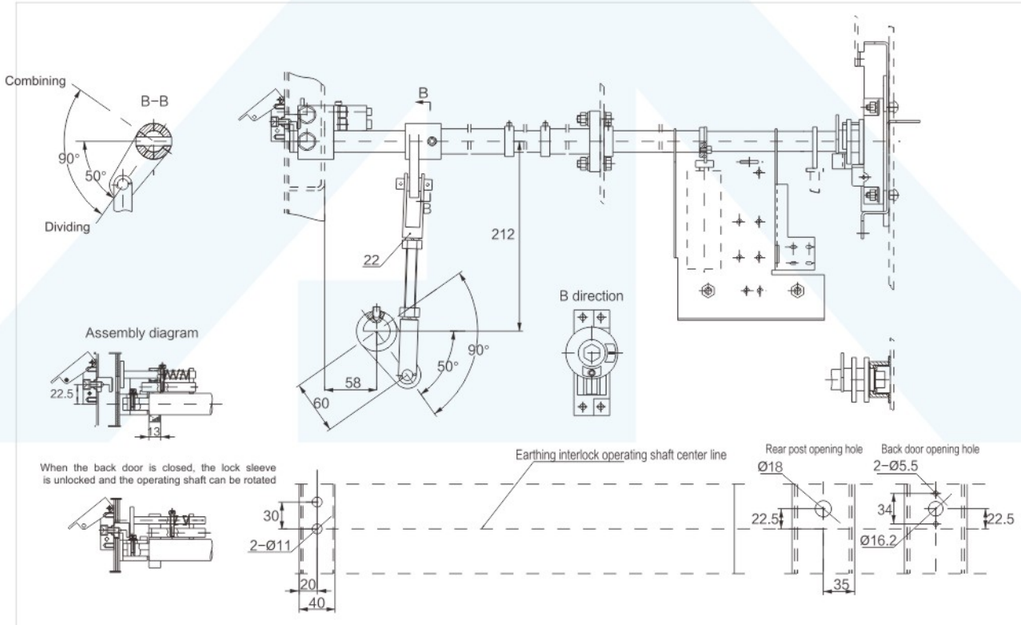

■ Note: the electric operation structure should cooperate with our electric earthing switch or consult our technical department.

Earthing switch operation mechanism interlock device(For arm drive operation)Pulling plate type KYN.5XJ.363.010.6

Recommended scheme: rear shaft flat steel structure note: only applicable to the scheme that the earthing switch loaded on the middle of cabinet(not at the back)

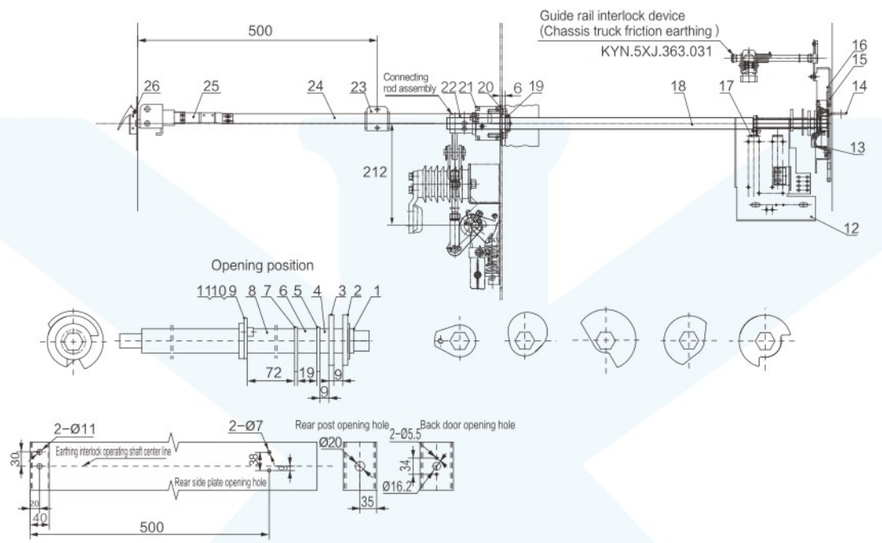

Earthing switch operation mechanism interlock device(For arm drive operation)Pulling plate type KYN.5XJ.363.010.6 Kitting list

No.	Item	Code	Qty
1	Bearing	8XS.263.011	1
2	Sector plate	8XS.192.010	1
3	Sector plate	8XS.192.011	1
4	Shaft sleeve	8XS.210.014.1	2
5	Sector plate	8XS.151.041	1
6	Shaft sleeve	8XS.211.061	1
7	Sector plate	8XS.151.039	1
8	Shaft sleeve	8XS.211.062	1
9	Screw M5x12	GB/T 70.1-2000	1
10	Sector plate	8XS.151.042	1
11	Sector plate	8XS.151.043	1
12	Bending plate	8XS.161.058	1
13	Support	8XS.043.022	1
14	Protecting cover	KYN.8XJ.211.362	1

No.	Item	Code	Qty
15	Bending plate	8XS.161.059	1
16	Slide block	8XS.143.010	2
17	Slotting plate	8XS.151.044	1
18	Operating shaft	8XS.200.253	1
19	Stop collar	8XS.211.057	1
20	Base plate	KYN.8XJ.157.044	choose
21	Fix base	KYN.5XJ.143.055	1
22	Connecting rod assembly	KYN.5XJ.233.052	1
23	Bracket	KYN.8XJ.043.254	1
24	Active plate	KYN.5XJ.150.083	
25	Bracket assembly	KYN.5XJ.043.058	1
26	Interlock block assembly	KYN.5XJ.143.056	1
27	Shaft sleeve	8XS.211.060	1
28	Label	8XS.860.010	1

■ Note: the electric operation structure should cooperate with our electric earthing switch or consult our technical department.

Earthing switch operation mechanism interlock device(Electric manual priority)Pulling plate type KYN.5XJ.363.010.6S

note: only applicable to the scheme that the earthing switch loaded on the middle of cabinet(not at the back)

Principle: press down the bending plate of No. 15 (the handle is inserted), touch the micro switch, cut off the motor signal, so as to realize the priority of manual

Note: 1. The guide interlock is not standard, you need to place a separate order

2.The bending plate with no. 15 in this set of mechanism is always in the state of up-drawing (with no. 18 tension spring, please note).

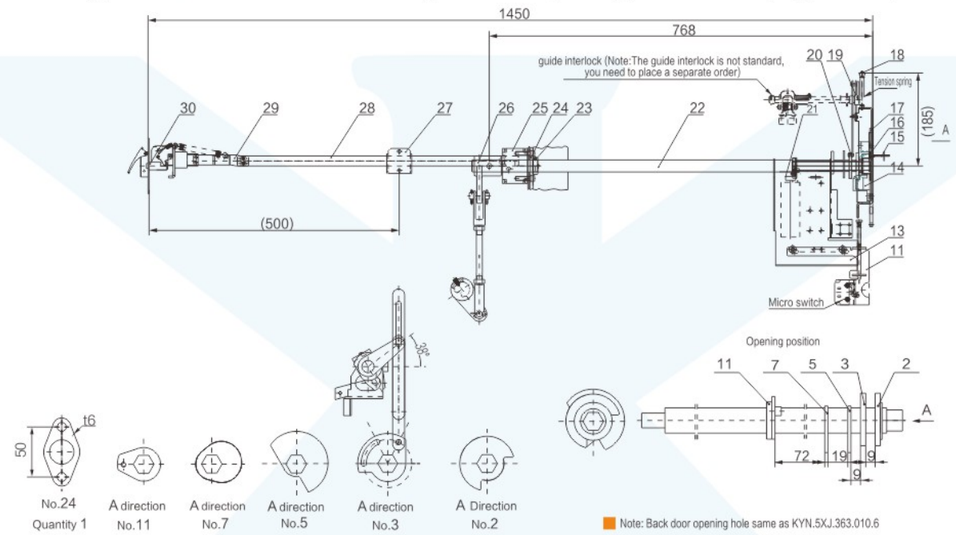

Earthing switch operation mechanism interlock device(Electric manual priority)Pulling plate type KYN.5XJ.363.010.6S Kitting list

No.	Item	Code	Qty
1	Bearing	8XS.263.011	1
2	Sector plate	8XS.192.010	1
3	Sector plate	KYN.8XJ.191.011.5/TRD	1
4	Shaft sleeve	8XS.210.014.1	2
5	Sector plate	8XS.151.041	1
6	Shaft sleeve	8XS.211.061	1
7	Sector plate	8XS.151.039	1
8	Shaft sleeve	8XS.211.062	1
9	Screw M5x12	GB/T 70.1-2000	1
10	Sector plate	8XS.151.042	1
11	Bending plate assembly	KYN.5XJ.161.058.25/TRD	1
12	Sector plate	8XS.151.043	1
13	Bending plate	8XS.161.058	1
14	Support	8XS.043.022	
15	Bending plate	KYN.8XJ.161.059.53/TSD	

No.	Item	Code	Qty
16	Cover	8XS.017.011.1	1
17	Slide block	8XS.143.010	2
18	Tension spring	8WXJ.288.087	1
19	Connecting plate	KYN.5XJ.174.010.33/XJ	1
20	Connecting plate	KYN.5XJ.174.010.33-1/XJ	1
21	Slotting plate	8XS.151.044	1
22	Operating shaft	KYN.8XJ.200.253	1
23	Stop collar	8XS.211.057	1
24	Shaft sleeve	KYN.8XJ.213.032.1/SAP	1
25	Fix base	KYN.5XJ.143.055	1
26	Connecting rod assembly	KYN.5XJ.233.052	1
27	Bracket	KYN.8XJ.043.254	1
28	Active plate welding (deeps 1450)	KYN.5XJ.150.083	1
29	Bracket assembly	KYN.5XJ.043.058	1
30	Interlock block assembly	KYN.5XJ.143.056	1

■ Note: the electric operation structure should cooperate with our electric earthing switch or consult our technical department.

Earthing switch operation mechanism interlock device (For bidirectional bevel gear operation) 5XS.577.1002 5XS.577.1002.1

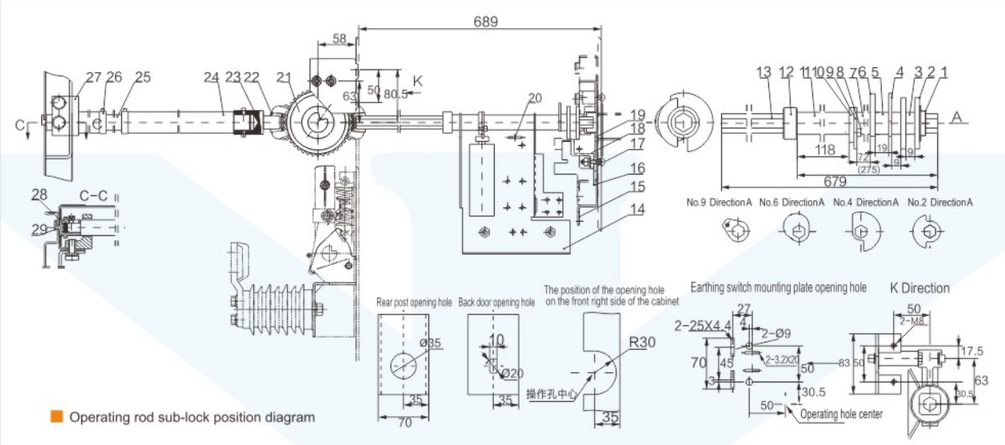

Operating rod sub-lock position diagram

Specialty:

It adopts bidirectional(Whole tooth)bevel gear to realize backdoor(seal plate)interlock, and has two forms:

a: 5XS.577.1002 is unidirectional interlock. After the earthing switch is closed, the backdoor(seal plate) can be opened. Then the earthing switch can still be operated. It has same interlock function as 5XS.363.010

b:5XS.57741002.1 is bidirectional interlock. After the earthing switch is closed, the backdoor(seal plate) can be opened. Then the earthing switch can' t be operated. It has same interlock function as 5XS.363.010.1.

5XS.245.002.1Bevel Gear device (this set contain the bevel gear device)

Earthing switch operation mechanism interlock device (For bidirectional bevel gear operation) 5XS.577.1002 5XS.577.1002.1

No.	Item	Code	Qty
1	Bearing	8XS.263.011	1
2	Limiting plate	8XS.151.084	2
3	Shaft sleeve	8XS.210.014.1	2
4	Sector plate	8XS.151.041	1
5	Shaft sleeve	8XS.210.061	1
6	Sector plate	8XS.151.039	1
7	Shaft sleeve	8XS.211.062	1
8	Screw M5*12	GB70−85	1
9	Sector plate	8XS.151.042	1
10	Sector plate	8XS.151.043	1
11	Shaft sleeve	8XS.210.014.3	1
12	Stop collar	8XS.210.322	1
13	Operating rod	8XS.174.214	1
14	Bending plate	8XS.161.058	1
15	Bearing	8XS.161.059	1
16	Bending plate	8XS.143.010	2
17	Screw M6*25	GB12−88	2
18	Support	8XS.043.022	1

No.	Item	Code	Qty
19	Cover	8XS.017.011.2	1
20	Slotting plate	8XS.151.044	1
21	Bevel gear assemble	5XS.245.002.1	1
22	Connecting block	8XS.143.108.2	1
23	Connecting sleeve	5XS.259.001.1	1
24	Shaft sleeve	8XS.211.060	2
25	Operating shaft (for 5XS.577.1002)	8XS.200.011.1 (for 1500depth cabinet)	1
		8XS.200.011.2 (for 1660depth cabinet)	
	Operating shaft (for 5XS.577.1002.1)	8XS.200.012.1 (for 1500depth cabinet)	
		8XS.200.012.2 (for 1660depth cabinet)	
26	Stop collar	8XS.211.057	2
27	Support	8XS.043.019.7	1
28	Pressure spring	8WXJ.282.201 (for 5XS.577.1002.1)	1
29	Lock sleeve	8XS.211.059 (for 5XS.577.1002) 8XS.211.201 (for 5XS.577.1002.1)	1
30	Bending plate	8XS.161.874	1
31	Fixed block	8XS.143.501	1
32	Scutcheon	8XS.860.010	1

Assembly types and installation dimensions for Bevel gear

If casting steel is required, please specify.

Bevel gear mechanism

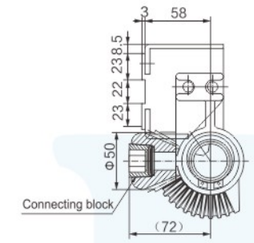

Bevel gear installation diagram

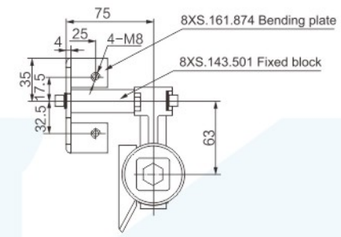

1. When ordering, please specify bevel gear assembly type.
2. Bending plate 8XS.161.874 and fixed block 8XS.141.501 are optional, not supplied in bevel gear set.

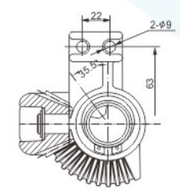

Middle inversion installation of earthing switch (i.e. right operation)

Bevel gear assembly for 5XS. 245. 001. 1

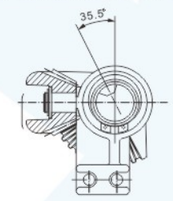

Earthing switch middle normal installation(i.e. left operation)

Bevel gear assembly for 5XS. 245. 001. 4

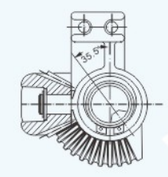

When grounding switch is installed in the rear (i.e. operation on the right)

Bevel gear assembly for 5XS. 245. 001. 2

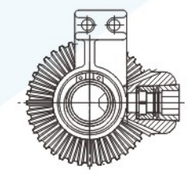

Bevel gear assembly for 5XS. 245. 002. 4

Configuration dimensions and components list for Connecting rod assembly 5XS.233.030.1~3

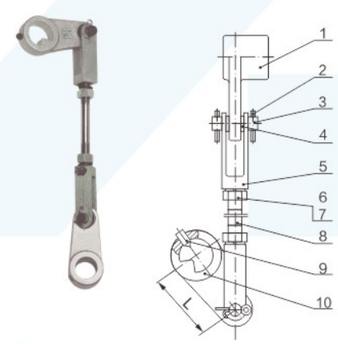

Connecting rod assembly

No.	Item	Code	Qty	L
1	Connecting lever	5XS.151.016.1	1	
2	Split pin 4*20	GB91-86	4	
3	Perforated pin 12*40	GB880-86	2	
4	Washer	8XS.950.010	4	
5	Support	8XS.257.010	2	
6	Nut M12	GB6170-86	2	
7	Washer Φ12	GB93-87	2	
8	Stud M12*120	GB901-88	1	
9	Screw M 8*16	GB78-85	1	
10	Connecting lever	5XS. 233. 030. 1 connecting lever	1	60
		For 5XS. 151. 017		
		5XS. 233. 030. 3 connecting lever	1	80
		For 5XS. 151. 017		

Note: Connecting rod usually matches with the connecting lever of L60. If you need the connecting lever of L80, please give clear indication when ordering.

If you want to change length of No.8(Stud), please give clear indication.

Earthing switch operation mechanism interlock device(For bevel gear operation) 5XS.577.1001

(Note: not include bevel gear,need to add)

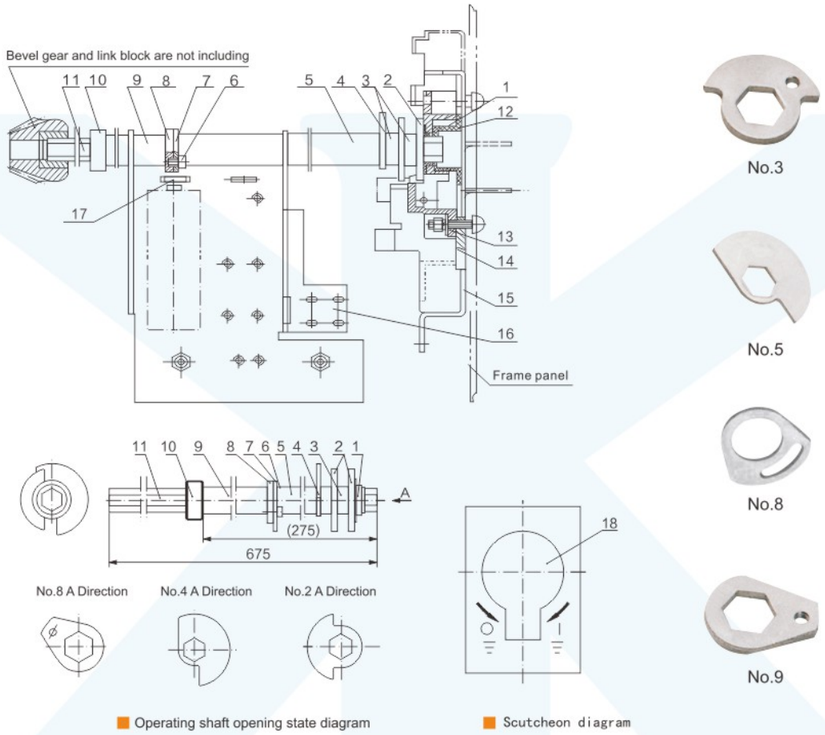

Earthing switch operation mechanism interlock device(For bevel gear operation) 5XS.577.1001

No.	Item	Code	Qty
1	Bearing	8XS.263.011	1
2	Stop collar	8XS.151.084	2
3	Shaft sleeve	8XS.210.014.1	2
4	Sector plate	8XS.151.041	1
5	Shaft sleeve	8XS.210.014.2	1
6	Screw M5*12	GB70−85	1
7	Sector plate	8XS.151.042	1
8	Sector plate	8XS.151.043	1
9	Shaft sleeve	8XS.210.014.3	1

No.	Item	Code	Qty
10	Stop sleeve	8XS.210.322	1
11	Operating rod	8XS.174.214	1
12	Cover	8XS.017.011.2	1
13	Support	5XS.043.022	1
14	Slide block	8XS.143.010	2
15	Bending plate	8XS.161.059	1
16	Bending plate	8XS.161.058	1
17	Slotting pate	8XS.151.044	1
18	Scutcheon	8XS.861.010	1

■ Note: As the mechanism needs to match with down interlock, please give clear indication when ordering.

(800mm mid-set switchgear)Flap mechanism device5XS.320.010 Dimension drawing

(fist generation, guid rob type)

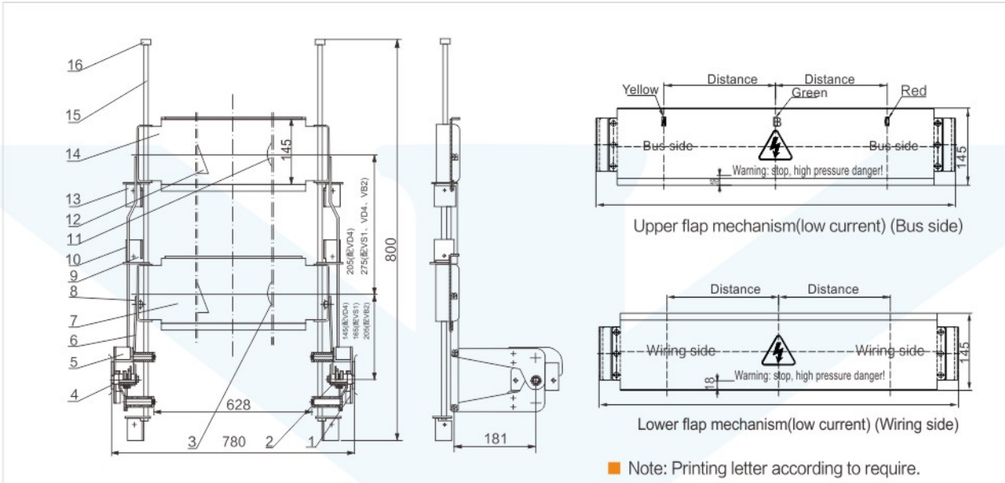

■ Note: Printing letter according to require.

Parts sheet of (800mm mid-set switchgear)Flap mechanism device5XS.320.010

No.	Item	Code	Qty
1	Right side sporting shelf	8XS.123.011	1
2	Right side linking plate	5XS.235.011	1
3	indicator board	8XS.866.014	1
4	left side linking plate	5XS.235.010	1
5	Right side sporting shelf	8XS.123.010	1
6	Flap welding linking plate	5XS.174.016.1(with VD4)	2
		5XS.174.016.2(with VS1)	
		5XS.174.016.3(with VB2)	
7	Lower flap mechanism	8XS.320.010	1
8	The door panel 8	8XS.123.010	8
9	Suporting plate	8XS.123.013	3

No.	Item	Code	Qty
10	Linking welding linking plate	5XS.174.015.1(With VD4、40A) 5XS.174.015.2(With VD4、31.5KA) 5XS.174.015.3(With VS1) 5XS.174.015.4(With VB1)	2
11	indicator board	8XS.866.012	1
12	indicator board	8XS.866.013	2
13	suporting plate	8XS.123.012	3
14	Upper flap mechanism	8XS.320.011	1
15	Guide bar	8XS.234.011(With VD4、VS1) 8XS.234.011.1(With VB2)	2
16	Stop collar	8XS.210.011	2

Flap mechanism of other sizes

No.	5XS.320.010.1	5XS.320.010.2	5XS.320.010.3	5XS.320.010.4	5XS.320.010.5
Cabinet width	650mm	700mm	840mm	900mm	1000mm
Upper flap mechanism	8XS.320.011.1	8XS.320.011.2	8XS.320.011.3	8XS.320.011.4	8XS.320.011.5
Lower flap mechanism	8XS.320.010.1	8XS.320.010.2	8XS.320.010.3	8XS.320.0101.4	8XS.320.010.5
Insulating flap mechanism	5XS.320.013.7	5XS.320.013.6	5XS.320.012.2	5XS.320.012.1	5XS.320.012.4

■ Note: Please add /JY at the end of normal type Width:800,Insulating flap mechanism,5XS.320.012.3

Upper flap mechanism 5XS.320.012 / 5XS.320.012.1 (for 800mm / 1000mm width mid-set switchgear)

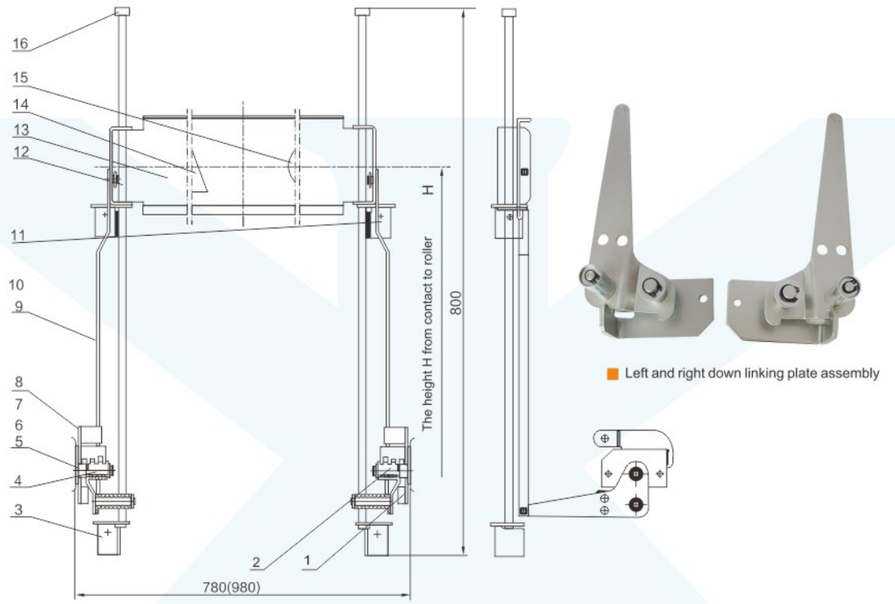

Note: If you need the insulation flap, please choose 5XS.320.012/JY or 5XS.320.012.1/JY.

Upper flap mechanism 5XS.320.012 / 5XS.320.012.1 (for 800mm / 1000mm width mid-set switchgear)

No.	Item	Code	Qty
1	Right support	8XS.123.011	1
2	Down linking plate (right)	5XS.174.004	1
3	Support plate	8XS.123.012	2
4	Down linking plate (left)	5XS.174.003	1
5	Washer	GB97.1-85	14
6	Washer	GB93-87	8
7	Bolt M	GB5783-86	8
8	Left support	8XS.123.010	1
9	Block card	DK-8	4

No.	Item	Code	Qty
10	Linking plate welding	5XS.174.015.1 (H=535、for VD4、40kA) 5XS.174.015.2 (H=465、for VD4、31.5kA) 5XS.174.015.3 (H=555、for VS1)	2
11	Support plate	8XS.123.013	2
12	Guide rod	8XS.234.011	2
13	Upper flap	8XS.320.011 (for 800mm depth cabinet) 8XS.320.011.5 (for 1000mm depth cabinet)	1
14	Indicator	8XS.866.013	1
15	Indicator	8XS.866.012	1
16	Stop collar	8XS.210.011	2

Upper flap mechanism 5XS.320.014 / 5XS.320.014.1 (for 800mm / 1000mm width mid-set switchgear)

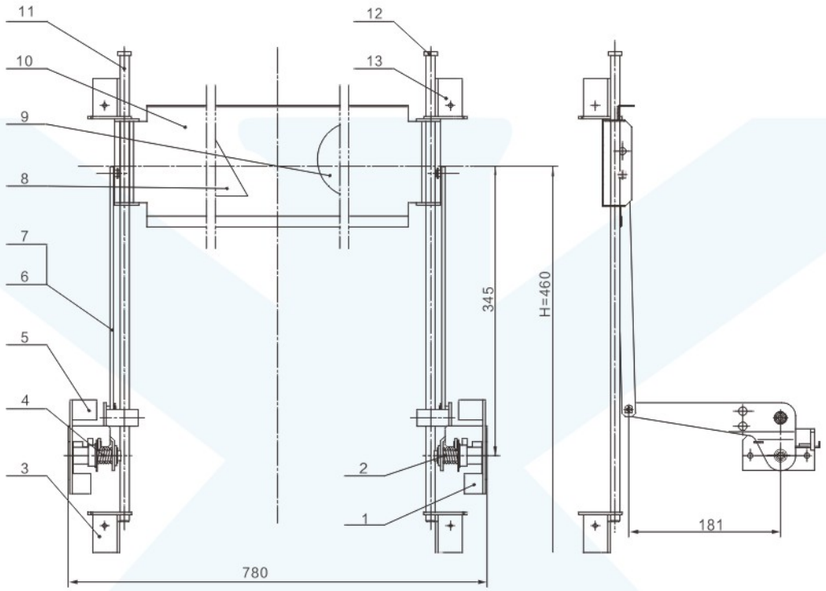

Note: If you need the insulation flap, please chose 5XS.320.014/JY or 5XS.320.014.1/JY.

Upper flap mechanism 5XS.320.014 / 5XS.320.014.1 (for 800mm / 1000mm width mid-set switchgear)

No.	Item	Code	Qty
1	Right support	8XS.123.011	1
2	Right linking plate	5XS.235.011.2	1
3	Support plate	8XS.123.012	2
4	Left linking plate	5XS.235.010.2	1
5	Left support	8XS.123.010	1
6	Block card	DK-8	4
7	Down flap	5XS.174.016.305	2

No.	Item	Code	Qty
8	Indicator	8XS.866.012	1
9	Indicator	8XS.866.013	1
10	Down flap	8XS.320.010 (for 800mm depth cabinet) 8XS.320.011.5 (for 1000mm depth cabinet)	1
11	Guide rod	KYN.8XJ.234.047.560	2
12	Stop collar	8XS.210.011	2
13	Support plate	8XS.123.013	2

Flap mechanism 5XS.320.011(for 1000mm width mid-set switchgear)

(fist generation, guid rob type) (Can provide vulcanization type)

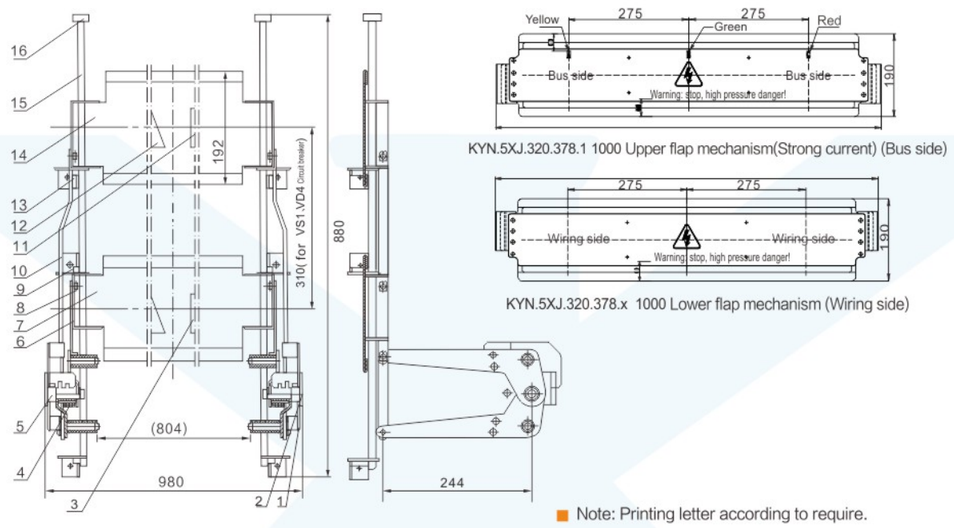

■ Note: Printing letter according to require.

Flap mechanism 5XS.320.011(for 1000mm width mid-set switchgear)

No.	Item	Code	Qty
1	Right support	8XS. 123. 276	1
2	Right linking plate	5XS. 235. 012	1
3	Sign	8XS. 866. 014	1
4	Right linking plate	5XS. 235. 013	1
5	Left support	8XS. 123. 275	1
6	Link plate welding	5XS. 174. 281	2
7	Down flap	8XS. 320. 273	1
8	Block card	DK-10	8

No.	Item	Code	Qty
9	Support plate	8XS.123.278	3
10	Link plate welding	5XS.174.282	2
11	Indicator	8XS.866.012	1
12	Indicator	8XS.866.013	2
13	Support plate	8XS.123.277	3
14	Upper flap	8XS.320.274	1
15	Guide rod	8XS.234.272	2
16	Stop collar	8XS.210.011	2

Flap mechanism of other sizes

Code	5XS.320.011.1	5XS.320.011/JY	5XS.320.011.2	5XS.320.011.3
Cabinet width	800mm	1000mm(insulation)	1100mm	1200mm
Upper flap	8XS.320.274.1	5XS.320.275	8XS.320.274.2	8XS.320.274.3
Down flap	8XS.320.273.1	5XS.320.275	8XS.320.273.2	8XS.320.273.3

■ Note: 5XS.320.275 is the insulation flap, and the material of its middle part and two sides are DMC plate and steel respectively.

Flap mechanism 5XS.320.011/24 (for 1000mm width 24kV mid-set switchgear)

(fist generation, guid rob type) (Can provide vulcanization type)

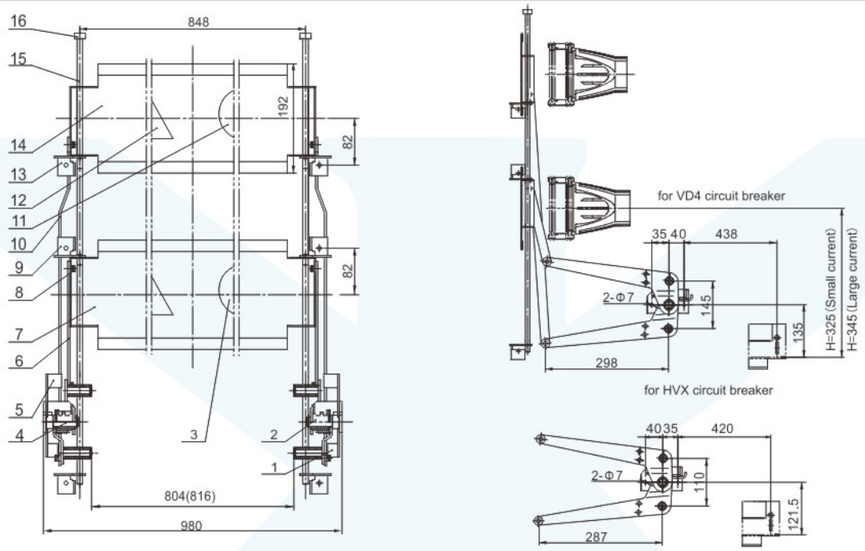

■ Note: 1. When ordering, please give clear indication that this type flap matches with VD4 or HVX breaker, with shaft distance of 804 or 816.
2. If you need the insulation flap, please choose 5XS.320.011/24/JY or 5XS.320.011/24/HVX/JY.
3. If you need the PT, please give clear indication.

Flap mechanism 5XS.320.011/24 (for 1000mm width 24kV mid-set switchgear)

No.	Item	Code	Qty
1	Right support	8XS.123.276.1	1
2	Right linking plate	5XX.235.012.10(for VD4,804)	1
		5XX.235.012.14(for VD4,816)	
		KYN.5XJ.235.030(for HVX,804)	
		KYN.5XJ.235.028(for HVX,816)	
3	Sign	8XS.866.014	1
4	Left linking plate	5XX.235.013.10(for VD4,804)	1
		5XX.235.013.14(for VD4,816)	
		KYN.5XJ.235.029(for HVX,804)	
		KYN.5XJ.235.027(for HVX,816)	
5	Left support	8XS.123.275.1	1
6	Link plate welding	5XS.174.281.150 (for VD4, low current)	2
		5XS.174.281.170 (for VD4, high current)	
		5XS.174.281.200(forHVX)	

No.	Item	Code	Qty
7	Down flap	8XS.320.273	1
8	Block card	DK-10	8
9	Support plate	8XS.123.278	3
10	Link plate welding	5XS.174.282.585 (for VD4, low current)	2
		5XS.174.282.605 (for VD4, high current)	
		5XS.174.282.555 (for HVX)	
11	Indicator	8XS.866.012	1
12	Indicator	8XS.866.013	2
13	Support plate	8XS.123.277	3
14	Upper flap	8XS.320.274	1
15	Guide rod	8XS.234.272/24	2
16	Stop collar	8XS.210.010	2

800 Flap mechanism KYN.5XJ.320.110

Second generation switchgear: guide rail type

■ Note: Printing letter according to require.

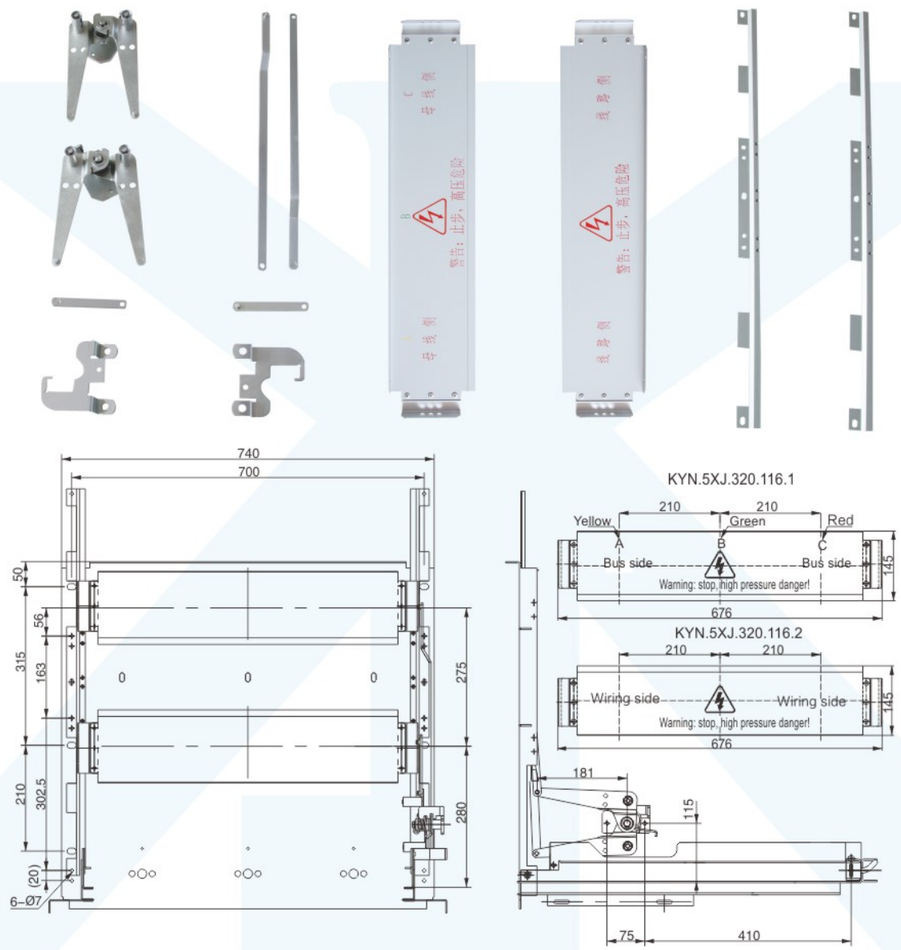

Specification

- The flap mechanism is a guide-type, the mounting hole USES the original hole of the bracket plate of the original pilot lever, and it is not necessary to change the cabinet structure.
- Specify VS1,VD4 model of the chassis truck when ordering, special chassis please provide picture.
- Standard flap are metal plate (painting RAL7035), if need Insulation board add /JY at the end of model number.
- If self-locking function is required, add /HZS at the end of model number.

1000 Flap mechanism KYN.5XJ.320.111-VS1 same as VD4

Second generation switchgear: guide rail type (Can provide vulcanization type)

■ Note: Printing letter according to require.

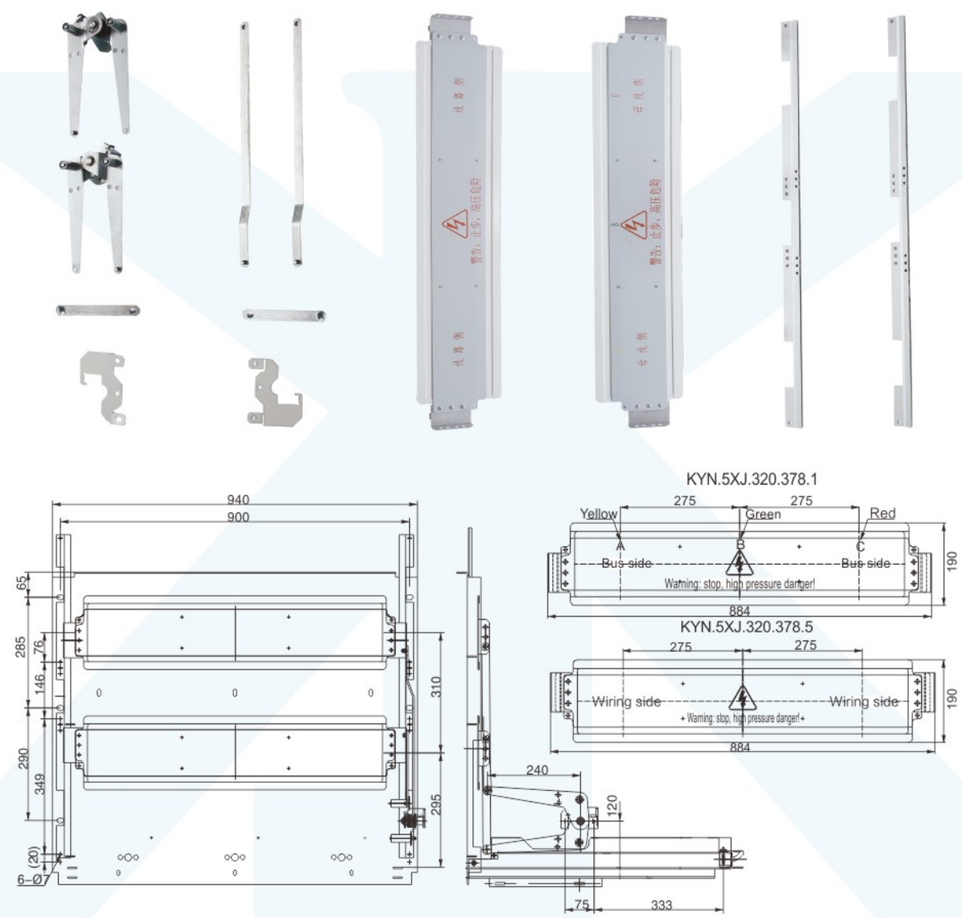

Specification

- The flap mechanism is a guide-type, the mounting hole USES the original hole of the bracket plate of the original pilot lever, and it is not necessary to change the cabinet structure.
- Specify VS1,VD4 model of the chassis truck when ordering, special chassis please provide picture.
- This flap mechanism is suitable for conventional contact box. If the contact box is increased in height, please specify when ordering.
- Standard flap plate are insulation plate (because the distance is not enough), can increase the metal plate on this basis (paint RAL7035 color) need to indicate when ordering
- If self-locking function is required, add /HZS at the end of model number.

Flap mechanism self-locking device 5XS.320.010/HZS assembly diagram

■ Small current 800 switchgear (Lift side connecting plate KYN.5XJ.235.110) ■ Small current 800 switchgear (Right side connecting plate KYN.5XJ.235.111)

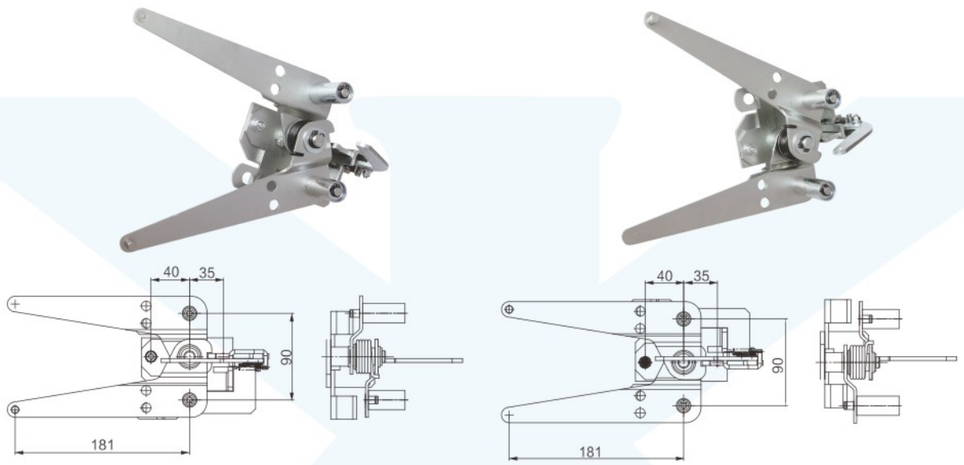

Flap mechanism self-locking device 5XS.320.010/HZS1 assembly diagram (Second generation switchgear)

■ KYN.5XJ.235.051.4 Lift side connecting plate ■ KYN.5XJ.235.052.4 Right side connecting plate

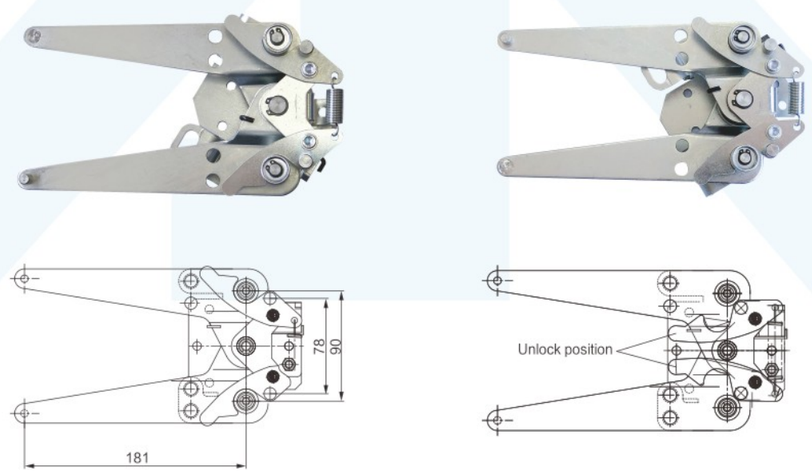

兴机电器 XINGJI ELECTRICAL

Flap mechanism self-locking device 5XS.320.011/HZS assembly diagram

■ Strong current 1000 switchgear (Lift side connecting plate KYN.5XJ.235.114) ■ Strong current1000 switchgear (Right side connecting plate KYN.5XJ.235.115)

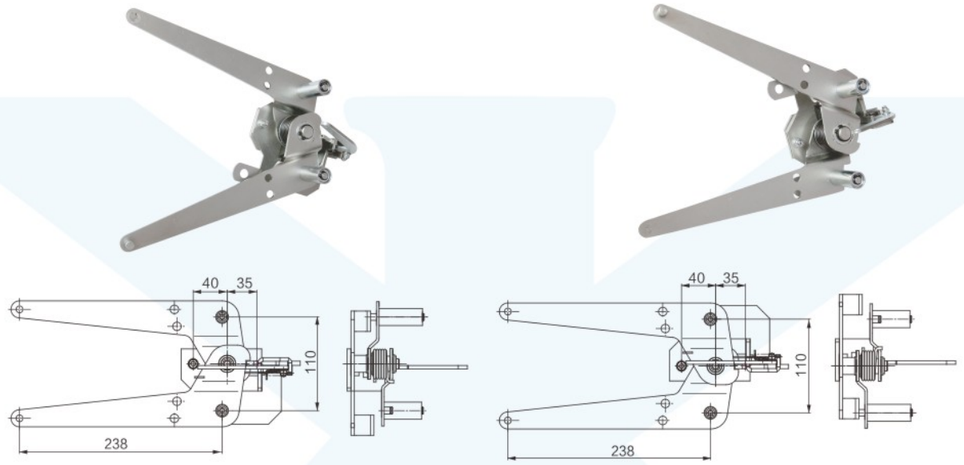

Flap mechanism self-locking device 5XS.320.011/HZS1 assembly diagram (Second generation switchgear)

■ KYN.5XJ.235.055.4 Lift side connecting plate ■ KYN.5XJ.235.056.4 Right side connecting plate

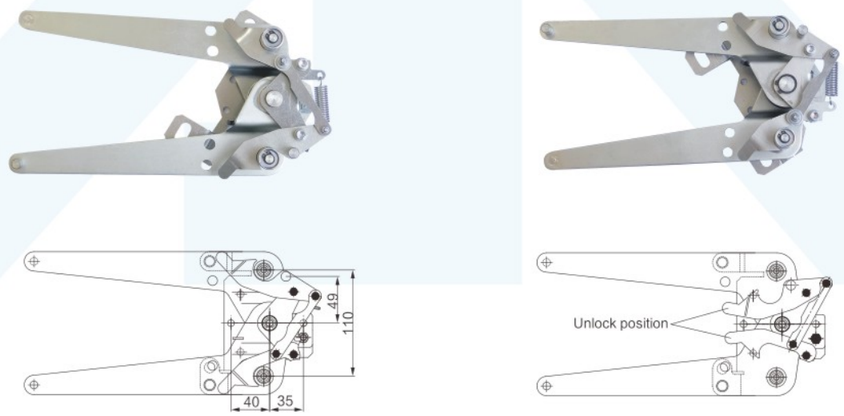

■ Left side guide rail 5XS.260.011

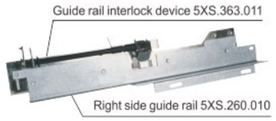

■ Guide rail interlock and guide rail assembly 3WXJ.836.001

■ Guide rail interlock device 5XS.363.011

Configuration and installation dimensions for Guide rail 5XS.260.010/011 (Standard type)

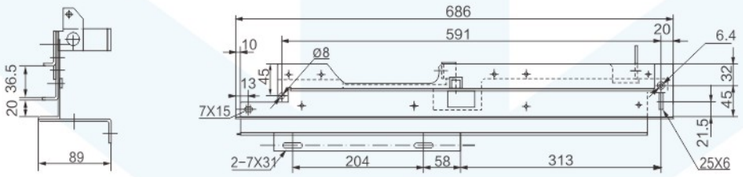

Guide rail 5XS.260. 010/011 (Lengthened type :lengthen 200, suitable for 3AH, ZN12, ZN28, ZN56 etc.)

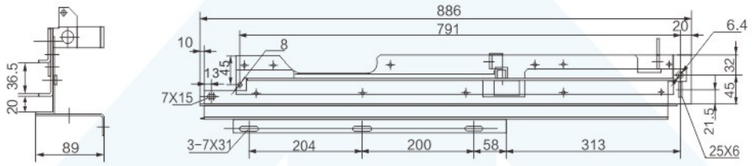

Guide rail 5XS.260. 010/011 (Lengthened type :lengthen 153, suitable for VB2 etc.

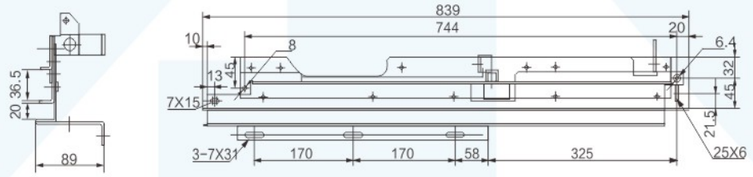

Configuration and installation dimensions for 24kv guide rail 5XS.260.010/24 5XS.260.011/24

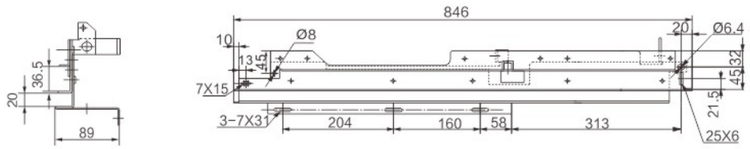

■ Configuration and installation dimensio

Guide rail for earthing switch (copper guide rail)

■ Left side guide rail 5XS.260.010.20/BJK

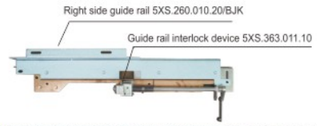

■ Guide rail interlock and guide rail assembly 3WXJ.836.001.1

■ Guide rail interlock device 5XS.363.011.10

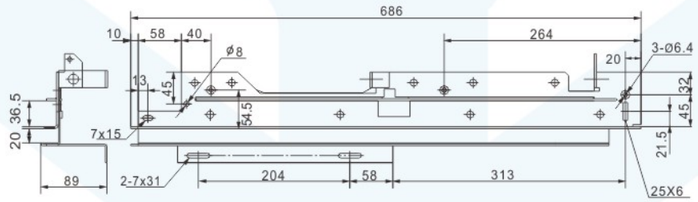

Guide rail interlock device KYN.5XJ.363.031 (VS1) KYN.5XJ.363.031.1 (VD4)

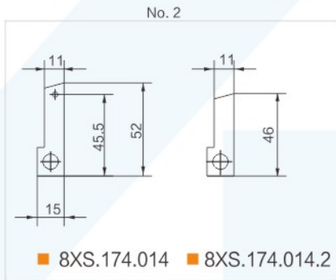

■ 8XS.174.014 ■ 8XS.174.014.2

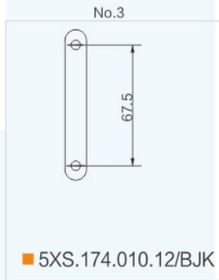

■ 5XS.174.010.12/BJK

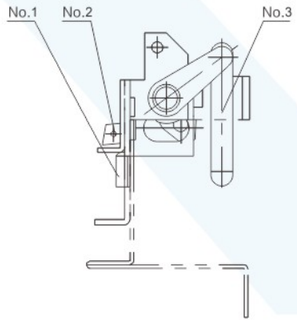

NO.	Name	Code	Remark
1	Bending plate	KYN.8XJ.128.076	Vertical, with increased slope on both sides
2	Block plate	8XS.174.014	Collocate with VS1（steel guide rail）
		8XS.174.014.2	Collocate with VD4 (copper guide rail)
3	Connecting plate	5XS.174.010.12/BJK	Length can be changed as required

Aluminum guide rail

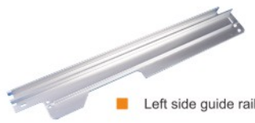

■ Left side guide rail：KYN.8XJ.260.021

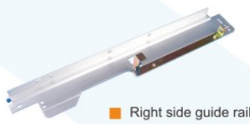

■ Right side guide rail：KYN.5XJ.260.006

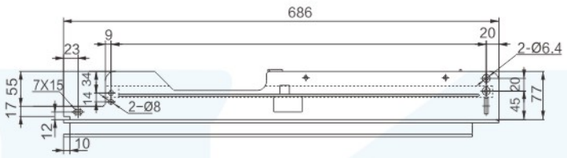

The drawing of the holes

Dimensions of aluminum guide rail with bent plate (Meet IP2X design)

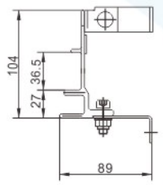

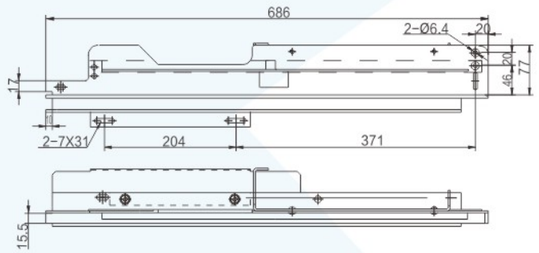

■ Left guide rail：KYN.5XJ.260.132/HTL
Right guide rail：KYN.5XJ.260.133/HTL

24KV aluminum guide rail dimension (Deepen front cabinet 160mm)

■ Left guide rail：KYN.8XJ.260.023
Right guide rail：KYN.5XJ.260.007

■ Note: please specify the interlocking assembly of right guide and guide.

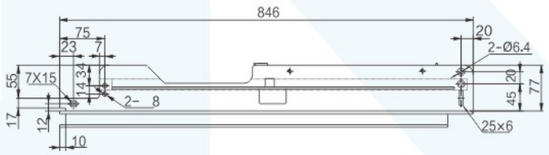

Aluminum guide rail dimension +opening hole

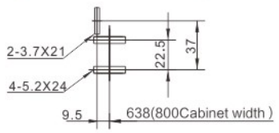

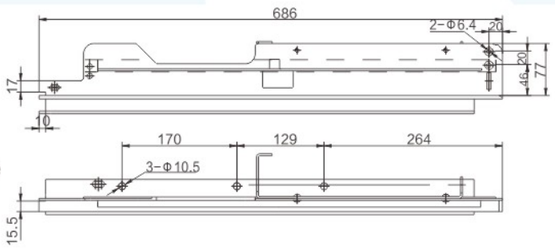

■ Contact box mounting plate recommended opening hole
■ Left guide rail：KYN.8XJ.260.021
Right guide rail：KYN.5XJ.260.006

■ Secondary socket interlock mechanism 5XS.573.010

■ Secondary socket interlock mechanism
Used for 64 cores secondary socket

Components list of secondary socket interlock mechanism 5XS.573.010

No.	Item	Code	Qty
1	Support	8XS.043.017.1-4	1
2	Roller	8XS.224.021	1
3	Tension spring	8XS.288.015	1
4	Interlock rod welding	5XS.174.017	1
5	Shaft	8XS.200.020	1
6	Split baffle ring Φ6	GB896-88	2
7	Screw	8XS.900.010	1
8	Nut M5	GB6170-86	1
9	Washer Φ5	GB93-87	1
10	Washer Φ5	GB97.1-85	1

Configuration and installation dimensions for secondary socket interlock mechanism 5XS.573.010

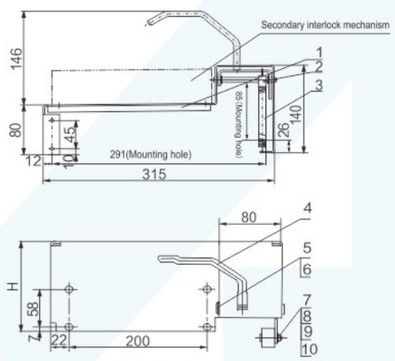

■ Configuration and installation dimensions for secondary socket interlock mechanism 5XS.573.010

■ Secondary socket interlock mechanism 5XS.573.010 mounting hole dimensions

■ Note: please give clear indication about the support height when ordering.

Support 8XS.043.017.1-4 suitable for secondary socket interlock mechanism 5XS.573.010 (unit mm)

(unit mm)

名 称	代 号	H	备 注
Support	8XS.043.017.1	136	Suitable for □ 1250A VD4 circuit breaker
	8XS.043.017.2	116	Suitable for VS1 circuit breaker
	8XS.043.017.3	126	Suitable for 1600A-2500A VD4 circuit breaker
	8XS.043.017.4	80	Suitable for 3150A VD4 circuit breaker
	8XS.043.017.14	100	

Interlock mechanism 5XS.239.010

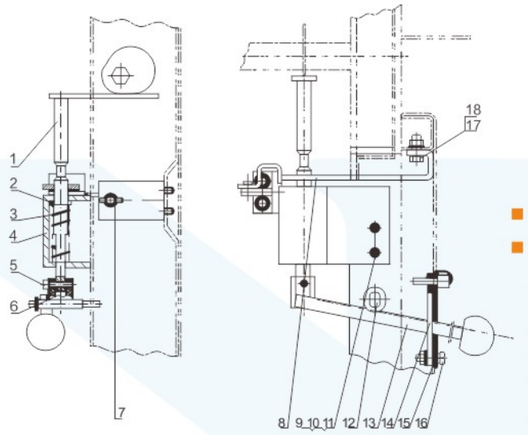

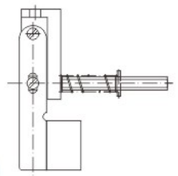

- Interlock mechanism 5XS.239.010
- No.7 Support assembly
- **Specialty:** This improved mechanism can meet the requirement of closing the earthing switch without locking the backdoor, and the handcart can't enter the working position. It needs to be operated in order: first shutting down door, then operating the earthing switch, and finally the handcart entering the working position from the test position in order to ensure personal safety.

Interlock mechanism 5XS.239.010

- Support assembly:5XS.043.020

- No.8

- No.13

- Support assembly:5XS.043.021

No.	Item	Code	Qty
1	Pin shaft welding	5XS.234.013	1
2	Pressure spring	8XS.282.021	1
3	Pin Φ3*20	GB879-86	2
4	Support	8XS.043.020	1
5	Screw M5*12	GB70-85	1
6	Cap	8XS.017.010	1
7	Support assembly	5XS.043.021	1
8	Tab	8XS.060.012	1
10	Screw M6*20	GB70-85	3

No.	Item	Code	Qty
10	Washer	GB93-87	5
11	Washer	GB97.1-85	7
12	Pin	8XS.200.015	1
13	Handel	5XS.253.010	1
14	Base plate	8XS.156.011	1
15	Bending plate	8XS.161.055	1
16	Pin	8XS.993.051	2
17	Screw M60*20	GB5783-85	2
18	Nut M6	GB6170-86	2

Interlock mechanism KYN.5XJ.239.011 (The second generation switchgear)

The earthing switch opens, the movable plate hooks the upper pin shaft of the door, and the front lower door cannotbe opened (if you need a new structure -- reverse interlock of the front lower door, please contact our company)

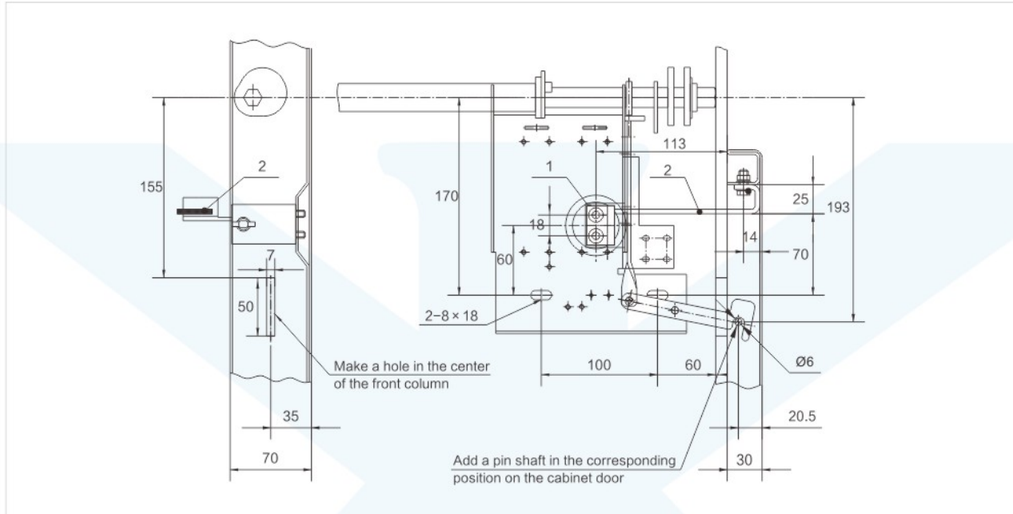

Interlock mechanism KYN.5XJ.239.012 (The second generation switchgear)

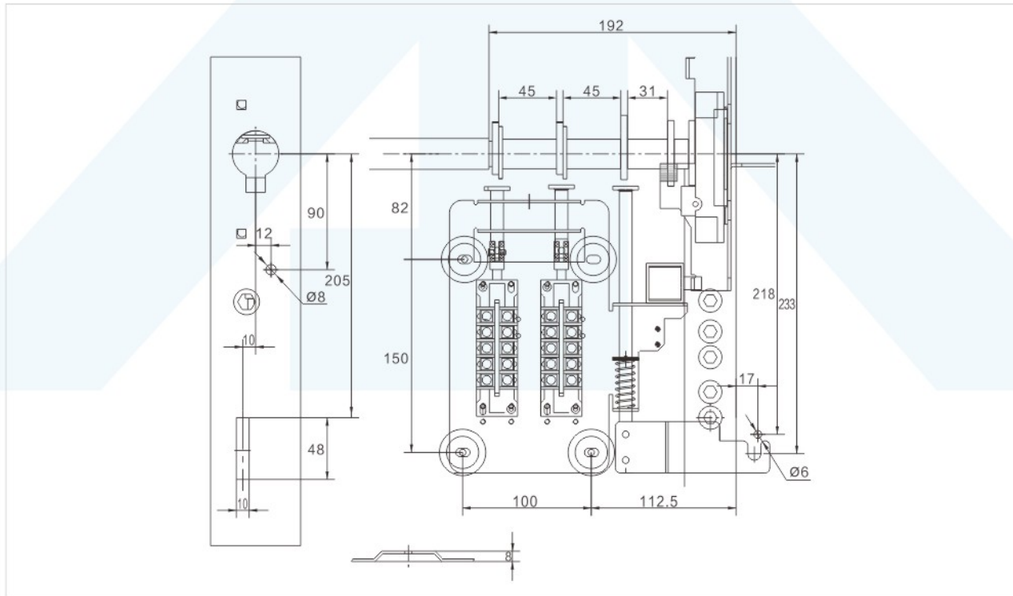

Emergency release device KYN.5XJ.259.003

There are two kinds of opening hole size, if you need the hole size of three holes, please contact our company

Instructions

The product adopts rotating folding structure, two-handed operation, can realize the emergency opening operation of the circuit breaker in the working position when the cabinet door cannot be opened. It has the advantages of simple structure and convenient operation, and the stroke is 23mm.

Note: the standard length is 255mm. If other length is needed, please specify when ordering.

Only 4-m6 studs need to be welded on the back of your cabinet door and a Φ32.5mm hole.

Principle

This product has the automatic reset function, the normal state is folded, one hand press the push rod, to realize the breaker manual opening.

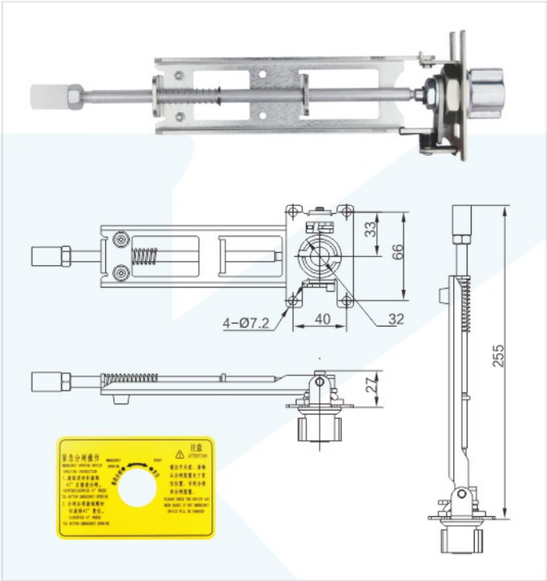

Interlocking mechanism(Interlocking of the after upper and lower door)KYN.5XJ.239.014

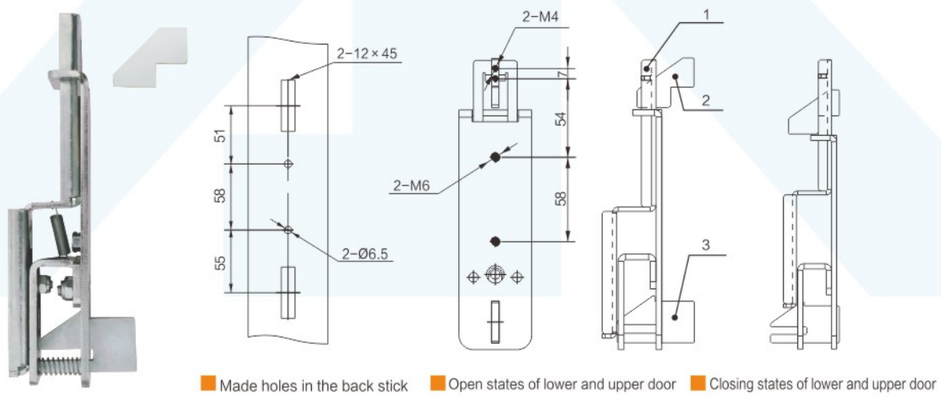

- **Description:** It is easy to install, and it is flexible and with better stability.
- **Principle:** when the after upper door is open, the sliding plate can block the plating in the order3, than the after lower door cannot be opened, only if the upper door is off, the plate in the order2 can make the sliding plate in the order 1 move. Otherwise, only the lower door is open, the upper door can be opened.

Middle door padlock KYN.5XJ.161.022

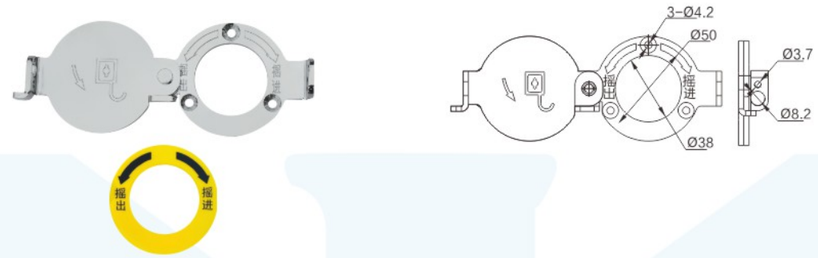

Cabinet door inner gear set (for concavoconvex door and middle door interlock chassis P008)

KYN.8XJ.211.322

KYN.8XJ.211.321

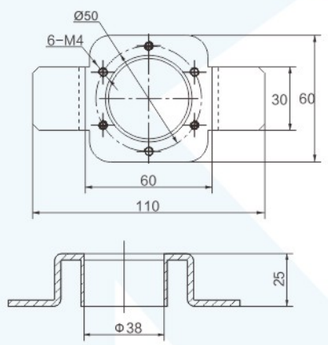

Chassis truck access sign

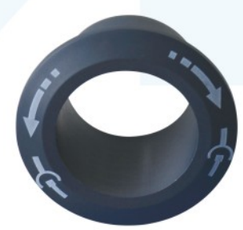

KYN.5XJ.869.030

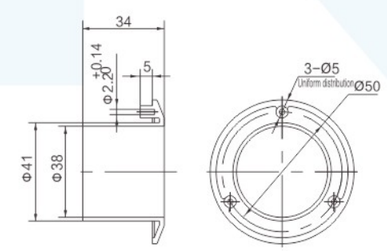

Padlock KYN.5XJ.161.018

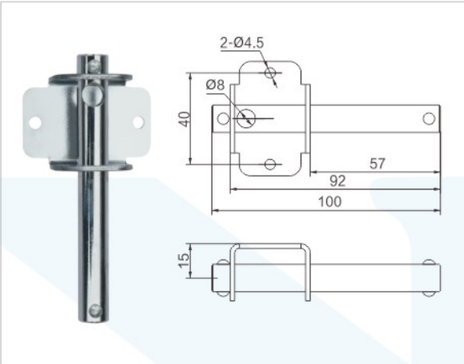

Ground switch padlock KYN.5XJ.161.010.3/SJN

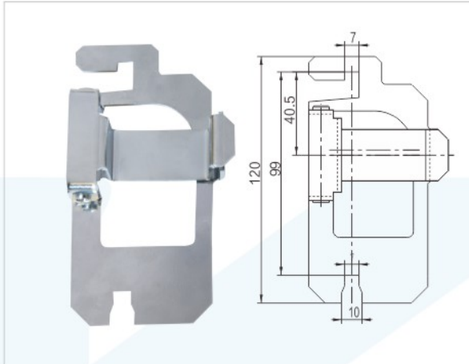

Ground switch padlock KYN.5XJ.161.030

High handle in position to pull out function
Match handle KYN.5XJ.253.011.33

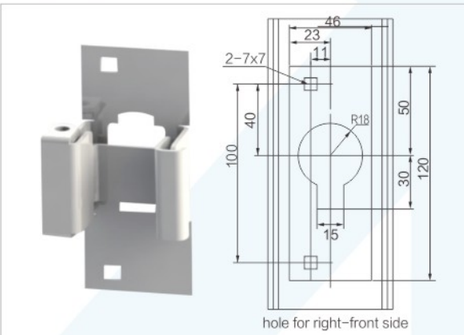

Ground switch padlock KYN.5XJ.161.010.3

Normal plan

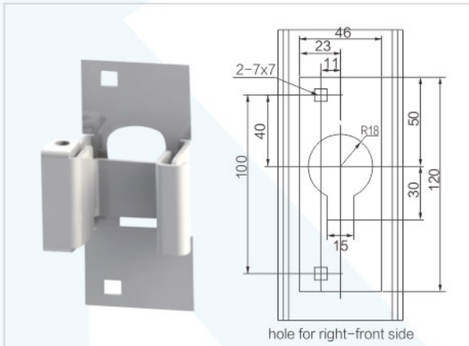

Door limit device KYN.5XJ.363.036

Door limit device

Labeling KYN.8XJ.867.146

The high pressure handle

KYN.5XJ.253.011.10

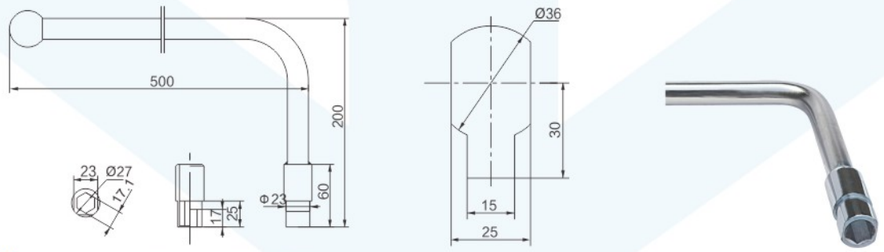

■ Used for hole opening of umbrella gear

KYN.5XJ.253.011.33

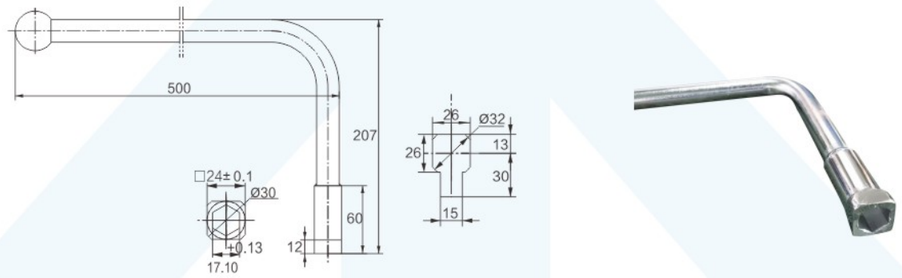

■ Used for hole opening of arm drive (earthing switch operation mechanism interlock device.)

KYN5XS.253.011.30

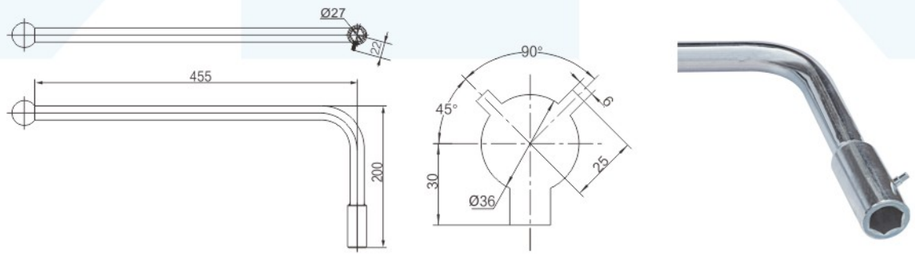

■ Used for hole opening of arm drive (earthing switch operation mechanism interlock device.)

Type meaning

GJL1-□ High-Voltage switch cabinet door hinge

GJL □-□

- Door hinge code
- Design Number
- High-Voltage switch cabinet door hinge code

Types and installation dimensions for high-voltage switch cabinet door GJL1-□

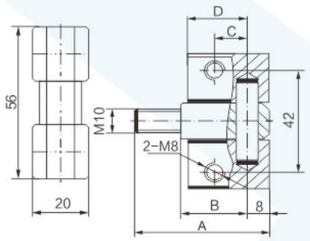

Type	Code	A	B	C	D	2-M8
GJL1-1	5XS.872.011	55	23	8	18	Through -hole
GJL1-2	5XS.872.011.1	56	26	12	22	
GJL1-3	5XS.872.012	55	23	8	18	Blind -hole
GJL1-4	5XS.872.012.1	56	26	12	22	

GJL1-□ Code and installation dimensions for high-voltage switch cabinet door hinge (unit: mm)

Types and installation dimensions for high-voltage switch cabinet door hinge GJL2-1

High-Voltage switch cabinet door hinge GJL2-1

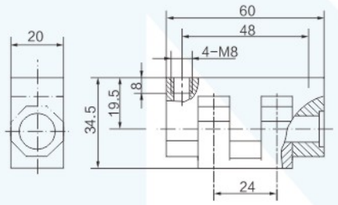

Configuration and installation dimensions for high-voltage switch cabinet door hinge GJL2-1

Types and installation dimensions for high-voltage switch cabinet door hinge GJL3-1

High-Voltage switch cabinet door hinge GJL3-1

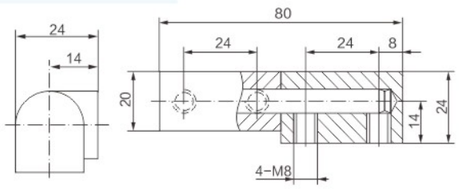

Configuration and installation dimensions for high-voltage switch cabinet door hinge GJL3-1

Configuration and installation dimensions for high-voltage switch cabinet door hinge GJL4-1

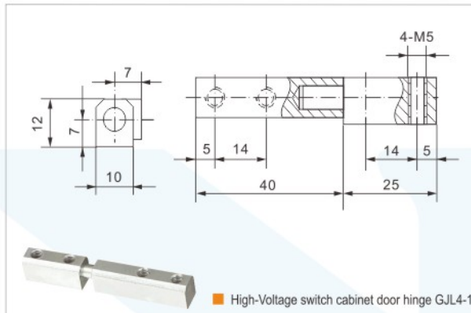

High-Voltage switch cabinet door hinge GJL4-1

Configuration and installation dimensions for high-voltage switch cabinet door hinge GJL5-1

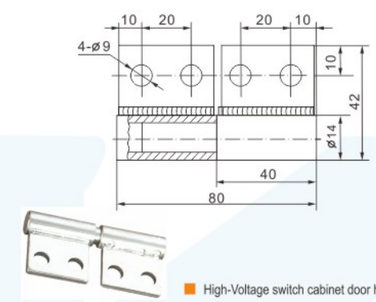

High-Voltage switch cabinet door hinge GJL5-1

Configuration and installation dimensions for high-voltage switch cabinet door hinge GJL6-1

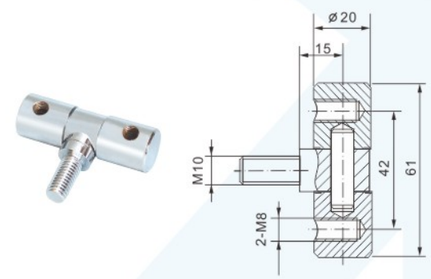

High-Voltage switch cabinet door hinge GJL6-1

Configuration and installation dimensions for high-voltage switch cabinet door hinge GJL7-1

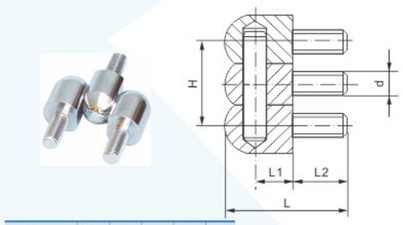

Type	H	d	L1	L2	L
GJ7-1	28	M8	13	18	41
GJ7-2	20	M6	9	11	30

High-Voltage switch cabinet door hinge GJL7-1

Configuration and installation dimensions for high-voltage switch cabinet door hinge GJL8-1

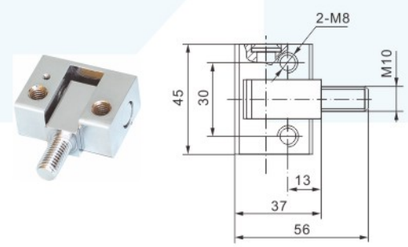

High-Voltage switch cabinet door hinge GJL8-1

Configuration and installation dimensions for high-voltage switch cabinet door hinge GJL9

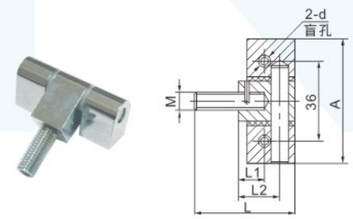

Type	A	M	L	L1	L2	D
GJL9-1	58	M10	53	14	22	M8
GJL9-2	56	M8	46	12	19	M6

High-Voltage switch cabinet door hinge GJL9

Hinge GJL9-1P

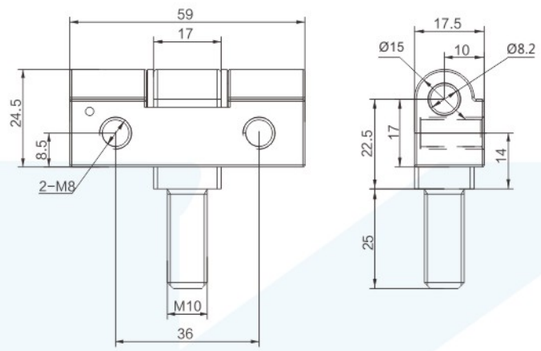

■ Matte black

Hinge GJL9-3P

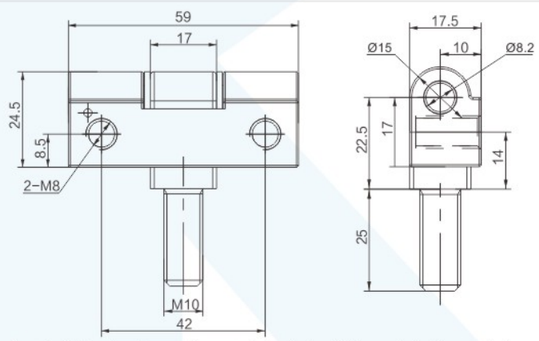

■ Matte black ■ Note: the default material is aluminum alloy, cast steel should be noted when ordering

Hinge GJL10-2P

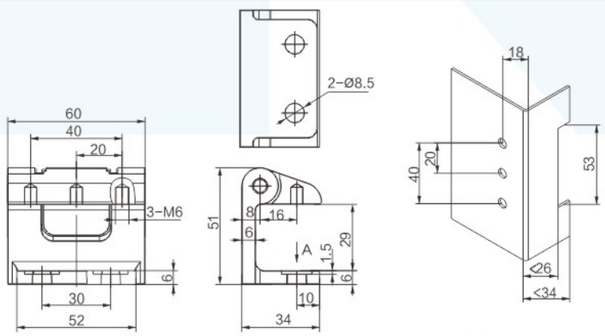

■ Matte black ■ Note: the default material is aluminum alloy, cast steel should be noted when ordering ■ Hole opening figure

Meaning of model number

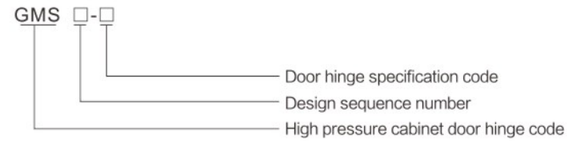

■ GMS1High voltage cabinet door lock

GMS1 Door lock model and installation size of high voltage cabinet

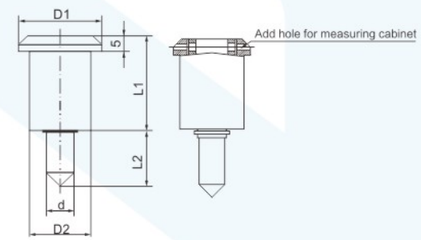

■ Add /GA after model when ordering GMS1 high voltage cabinet door lock appearance and installation size drawing

(unit: mm)

Code	D1	D2	d	L1	L2
GMS1-1	24	ø20	M8	31	22.5
GMS1-2	30	ø22	M10	35	20.5
GMS1-3	24	ø20	M8	31	34.5
GMS1-4	30	ø22	M8	35	20.5
GMS1-5	30	ø22	M10	35	29
GMS1-6	30	ø22	M10	40	20.5
GMS1-7	30	ø22	M8	27	23
GMS1-8	30	ø22	M10	45	20.5
GMS1-9	30	ø22	M8	35	25
GMS1-10	30	ø22	M10	31	24.5

■ GMS1 Dimension table of door lock of high voltage cabinet

Door lock GMS1-2P

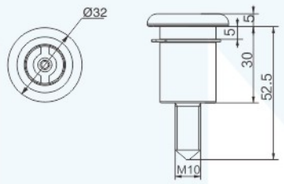

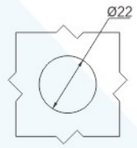

■ Matte black ■ Opening figure

Door lock GMS2-1P

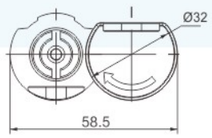

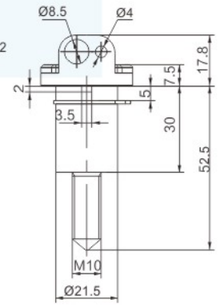

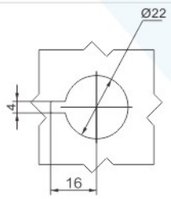

■ Matte black ■ Opening figure

Door lock GMS3-1P

■ Matte black

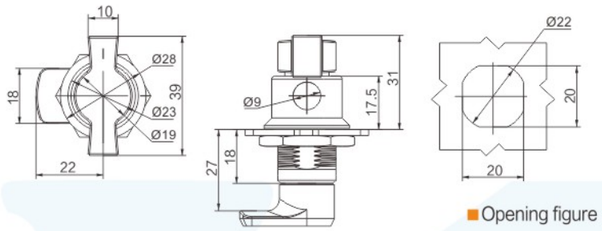

■ Opening figure

Quick-opening structure lock GMS4-1P GMS4-2P

■ Matte black

■ Matte black

■ MS9 Key (optional)

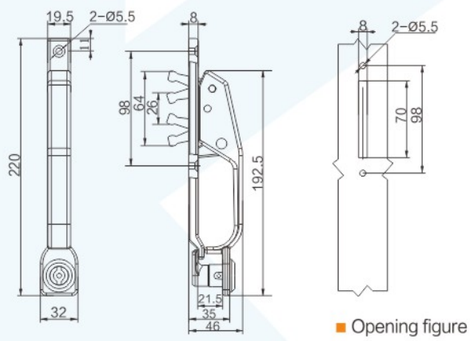

■ Opening figure

Quick-opening structure lock（With attachments）KYN.5XJ.GMS4-1P

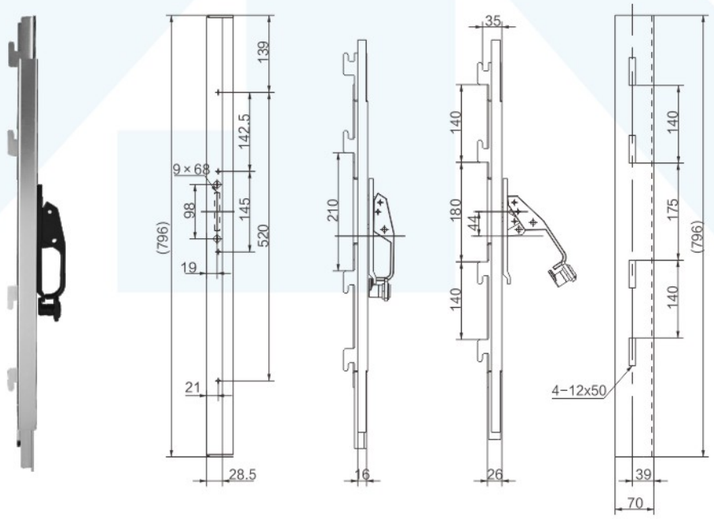

Hydraulic lift transport truck accessories (including all the following accessories)

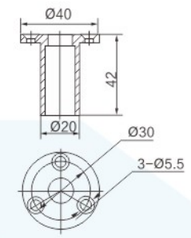

■ Set 8XS.211.065

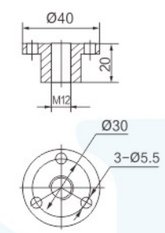

■ Set 8XS.211.064

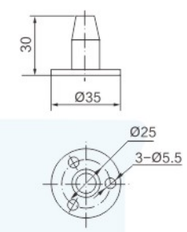

■ Guide bar 8XS.227.010

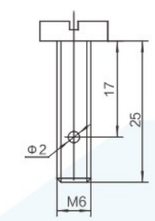

■ Pin 8WXJ.993.850

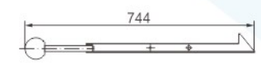

■ Connecting rod 5XS.234.015

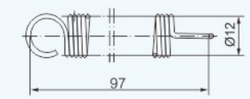

■ Tension spring 8XS.288.016

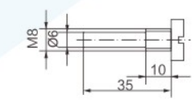

■ Pin 8XS.993.054

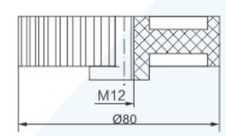

■ Disc 8XS.223.010

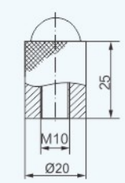

■ Column 8XS.132.010

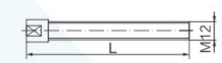

Model	Code	L
Screw	8XS.233.031	110
Screw	8XS.233.031.1	160
Screw	8XS.233.031.2	200
Screw	8XS.233.031.3	260
Screw	8XS.233.031.5	310

■ Screw 8XS.233.031

■ Fixed wheel/movable wheel

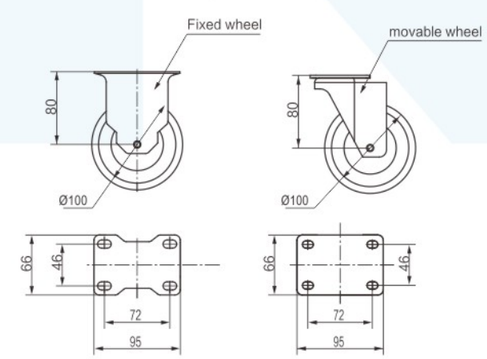

MJ2-□ small bus way

1. Characteristics:

Input copper pipe with diameter of Φ6 or Φ8 can be fixed in small bus seat of MJ2. The connecting wire of 2.5mm is used in cabinet. Small bus seat can be adjusted in section number to meet customer requirement.

2. Basic parameters:

1. Rated voltage: 660V
2. Rated current: 660A
3. Size: 2.5mm wire

pitch number	10节	12节	15节	17节	20节
A	203	255	315	355	415
B	205	243	303	343	403

■ Note: When ordering, please give clear indication about section number, such as MJ2-10, 12, 15, 17, 20, 22, 24, 26, etc.

■ Note: accessories

Cm1 Bus bar frame -15 section(4-6mm Wire type)

Mj1 us bar frame(ϕ8Copper rod type) B

MJ1	pitch number	8	9	10	11	12	13	14	15	16	17
	H	182	203	240	263	288	317	344	364	393	425

Configuration and installation dimensions for hydraulic lift transport truck series ZYC-1-650,ZYC-1-800,ZYC-1-1000

■ Highest

■ Lowest

Minimum height: 310mm
Maximum height: 940mm
Lift wei

Other accessories

■ Secondary cable sheath

■ Mid-set cabinet seal

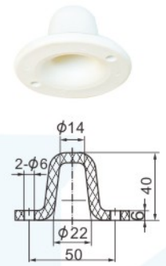

■ Sleeve：8XS.211.053

■ Nylon screw (explosion proof screw)：M6X20

■ Latching electromagnet

■ Please give clear indication when ordering:
Alternating current (AC):110V, 220V
Direct current (DC): 110V, 220V

■ Screw handle 8XS.989.010

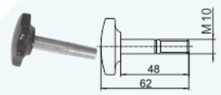

■ Screw handle KYN.5XJ.989.001

■ Note: economical screw handle (It could replace 8XS.989.010)

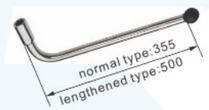

■ High-Voltage handle for earthing switch switching and closing

■ High-Voltage handle (standard type) 5XS.253.011

■ High-Voltage handle (elongated type) 5XS.253.011.1

■ Tower-shaped sealing ring

■ Note: The default diameter of tower-shaped sealing ringis : Φ110. Optional dimensions are as follows: Φ50,Φ70,Φ80,Φ90,Φ150.

■ Cable lamp

■ Note: accessories

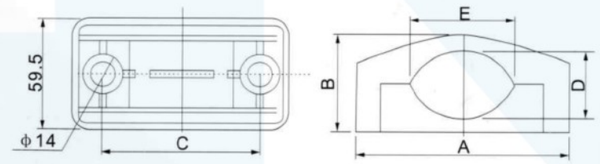

Type	A	B	C	D	E	Remark
K20/30	90	43	60.5	22	34	Small
K36/52	108	49.5	75	32.7	48	Small
K55/75	114.5	52.6	83.5	36	57	Middle
K75/95	128	66	96	46.7	69	Large
K90/150	150	55	120	65	95	Extra large

Toughened glass 320X210

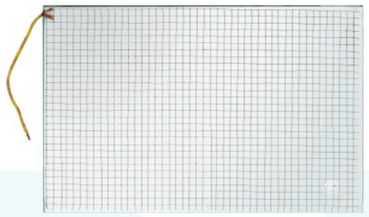

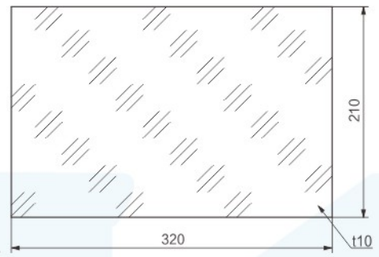

■ Not: If you need other sizes, please give clear indication when ordering.

Glass cabinet 8WXJ.321.550

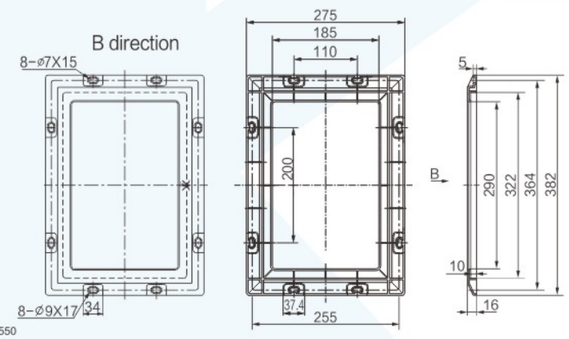

Configuration and installation dimensions for glass cabinet 8WXJ.321.550

■ **Characteristics:** Glass cabinet is a new product specially developed for observation window of KYN28(GZS1) mid-set switch cabinet. It has advantages of simple structure, easy installation, adaptable for the situation of high-temperature and high voltage, effective flame retardant, good look of observation window on cabinet. 10mm toughened glass of observation window can be covered effectively by the glass cabinet.

Bus seat: 8WXJ.022.550

■ **Bus way:** 8WXJ.022.550

■ **Application:** The product is suitable to fix the secondary wire of high and low voltage switch cabinet in fast installation and high adaptability. (Installation way:1.snap-fit installation, put it into mounting hole and rotate 90 degree to prevent from shedding; 2.installed by ST2.9 self-tapping screw). It has advantages of unstained direction, arbitrary binding, adopting ABS materials of well impact toughness and well rigidity.

1. snap-fit installation(fixed by rotating 90°) hole diagram:

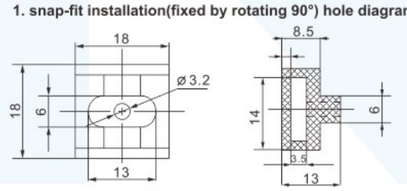

2. Screw Mounting hole dimensions diagram:

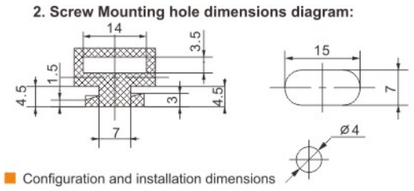

■ Configuration and installation dimensions

Earthing bar assembly

There is another simple version, if you need the simple version of earthing bar assembly, please inform

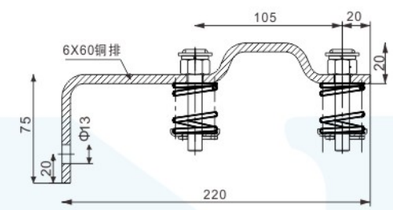

■ Earthing bar assembly :5XS.588.002(Standard)

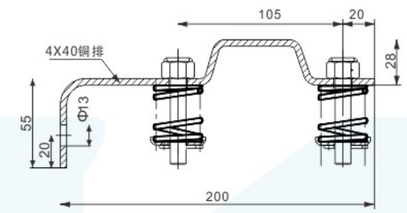

■ Earthing bar assembly :KYN.5XJ.588.013(Economical)

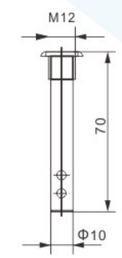

■ Pin :8XS.993.014

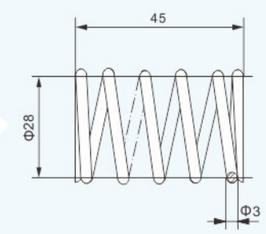

■ Ground bar spring :8XS.282.009

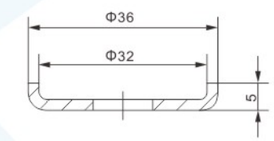

■ Cover :8XS.211.068

Earthing clamp assembly KJ.5XJ.577.003

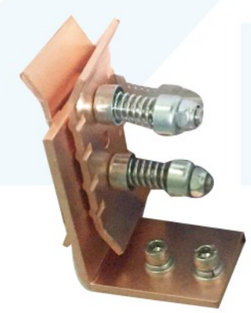

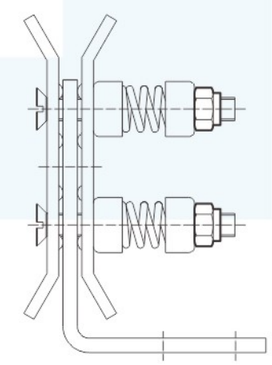

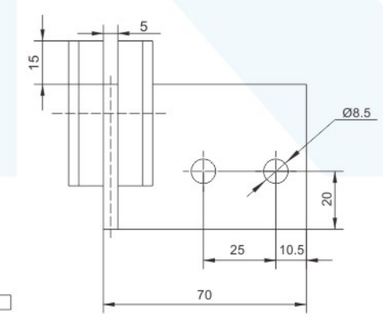

■ Earthing clamp assembly :KJ.5XJ.577.003

Secondary plug socket

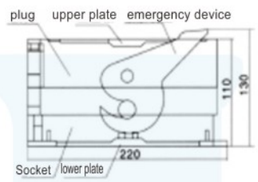

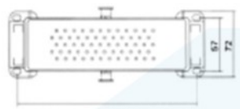

- USES: GZD-58 secondary plug, GZS11 with VS1, VD4 and other intermediate high voltage switchgear secondary line connection.
- Basic parameters: rated voltage: AC 380V, DC 220V; Rated current: AC 10A; Mechanical life: 2000 times
- Note: Accessory: pins (with spring) and the connecting pin jack (with spring) provided with the socket are only limited to the use of wires of 1.5mm2 or below; Please specify when ordering if used for 2.5mm2 or 4mm2.
- Configuration table: 1 plug, 1 socket, 2 turn heads, 1 metal hose, one package of pin and one package of pin jack

CD-64 Secondary plug socket

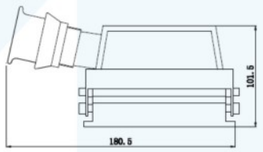

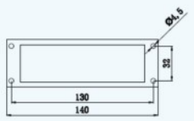

- Product parameters:
  Rated voltage: AC 380V, DC 220V
  Rated current: AC 16A, DC10A

  Mechanical life: 2000 times
  Product no. :
  Product name: Secondary plug socket
  Specification: CD64 core

- 64 core accessories
  Product number
  Product name: 64 pin
  The specification

HC-( )S heater

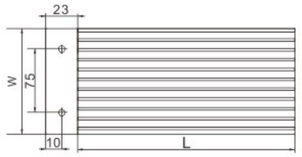

- Heater configuration dimensions diagram

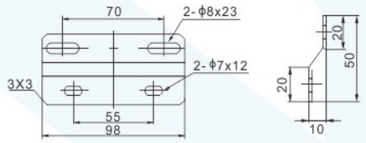

- Supporting installation dimensions diagram

Type	Heater power	L	W	H
HC--50S	50W	110	98	22
HC--75S	75W	110	98	22
HC--100S	100W	128	103	26
HC--150S	150W	128	103	26
HC--200S	200W	140	103	26
HC--250S	250W	155	103	26
HC--300S	300W	155	103	26
HC--500S	500W	285	103	30

- Note: accessories

Characteristics:

HC series aluminum alloy comb-like heater is a new type designed specially for the dehumidifying of power equipment. This heater adopts special aluminum alloy heat dissipation material and high-quality alloy heating wire. It has the advantages of small volume, good appearance, well heat dissipation, fast heat conduction, and large area of heating dissipation, so that its service life is better than other tubular heater. Furthermore, this heater also has the advantages of high insulation strength and easy installation. Matching with temperature and humidity controller of WSK series, HC series, it can realize the automatic control of humidity prevention and dewing prevention for power equipment.

Key technical parameters

Dielectric strength (terminal and surface): >2000 V
Insulation resistance: >10M
Continues service life: >5000 hours
Rated voltage: 50~500W
Operation voltage: AC380, 200V, DC220V, DC110

JSN(W) Prevent false operation program lock

Introduction

Prevent false operation program lock.It is a mechanical lock for high voltage switchgear. The lock forces the operator to follow the specified safe operating procedures. To operate the electrical equipment, so as to avoid misoperation of the electrical equipment, relatively perfect to meet the five prevention requirements put forward by the power supply department:
Prevent miss operate the switch
Prevent operate the isolation switch with load
Prevent from enter into chamber with power
Prevent grounding with power (grounding switch)
Prevent closing switches with grounding connected. etc.

Main technical index

Dielectric strength (wiring terminal and surface) > 2000V
Insulation resistance：>10M
Continuous service life：>5000hours

Rated power：50~500W ± 10%
Working voltage：
AC380V、200V、DC220V、DC110

model	Working voltage	Rated power	Size (mm)	Space between installation holes (mm)
JRD2-2	220V	25W	123*98*22	55-78
JRD2-2	220V	50W	145*98*22	55-78
JRD2-2	220V	75W	145*98*22	55-78
JRD2-2	220V	100W	143*103*25	55-78
JRD2-2	220V	150W	143*103*25	55-78
JRD2-2	220V	200W	158*103*25	55-78
JRD2-2	220V	250W	168*103*25	55-78
JRD2-2	220V	300W	168*103*25	55-78

DSN-AM Indoor electromagnetic lock

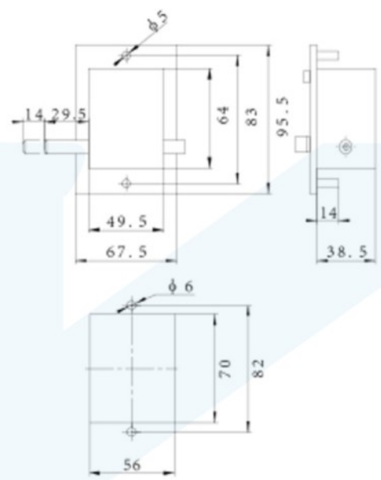

■ Note: The lock has left and right 2parts , left code Z; Right code Y, picture shows the left lock

Power supply	AC/DC110~220V DC24~48V(specify when ordering)

DSN-BM Indoor electromagnetic lock

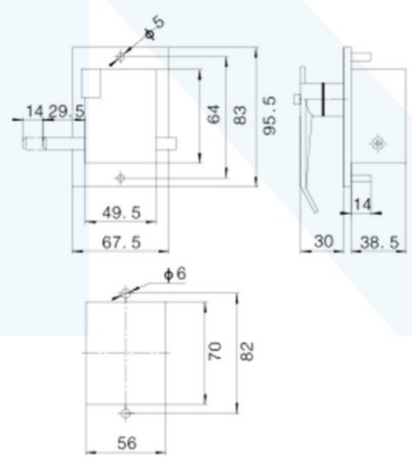

■ Note: The lock has left and right 2parts , left code Z; Right code Y, picture shows the left lock

Power supply	AC/DC110~220V

Characteristics

The characteristics of

CM series lighting lamp adopts the materials of high strength and high temperature resistance as the shell and shield, and has the advantages of well transparent, small volume, high safety, and easy to change bulb. It's an ideal lamp in all types of switch cabinet.

■ CM-1 type (open-door type, inserting buckle installation)

■ CM-3 type (open-cover type, screw fixing installation)

Key Technical Parameters

1. Rated voltage: AC220V
2. Rated power: ≦25W
3. Lamp cup: E27/27 screw
4. Environment temperature: -20~60°
5. Attitude: ≦2000m

Configuration and installation dimensions for lighting lamp CM-1

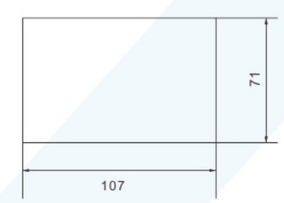

■ CM-1 hole dimensions

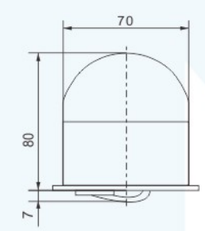

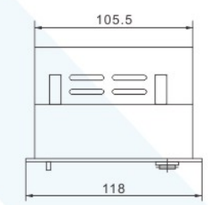

■ Note: accessories

Configuration and installation dimensions for lighting lamp CM-3

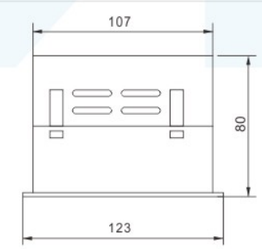

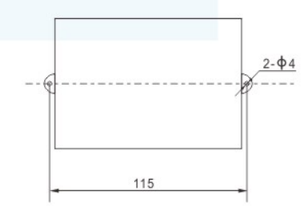

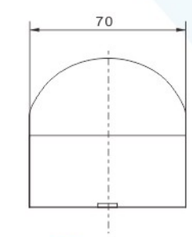

■ Note: accessories

ZS display

Product model and meaning

ZS - □ - □ / □

- Function: T type (logo type)
  Type Q (identification mandatory)
- The rated voltage
- appearance
- display

■ There are two types of type I monitors: reminder type (T) and mandatory latching type (Q). Type II monitors only have reminder type (T) and do not have mandatory latching type (Q).

The opening hole sizes of the ZS display type I and II mounting holes are as follows

Product model	The size of opening hole	The rated voltage	Power supply	Connection mode	Output	Phasing tester function	The signal ground	Adaptive capacity
T1	100*70	7.2~40.5	/	Plug type	/	No	No	100~120PF
T2	100*70	7.2~40.5	/	Plug type	/	Yes	No	100~120PF
Q5	100*70	7.2~40.5	AC220V	Plug type	Active	No	No	100~120PF
Q6	100*70	7.2~40.5	DC220V	Plug type	Active	No	No	100~120PF
Q7	100*70	7.2~40.5	DC110V	Plug type	Active	No	No	100~120PF
Q8	100*70	7.2~40.5	AC/DC110~220V	Plug type	No	No	No	100~120PF
Q9	100*70	7.2~40.5	AC/DC110~220V	Plug type	No	Yes	No	100~120PF
Q10	100*70	7.2~40.5	AC220V	Plug type	Active	Yes	No	100~120PF
Q11	100*70	7.2~40.5	DC220V	Plug type	Active	Yes	No	100~120PF
Q12	100*70	7.2~40.5	AC110V	Plug type	Active	No	No	100~120PF
Q13	100*70	7.2~40.5	DC110V	Plug type	Active	Yes	No	100~120PF
Q14	100*70	7.2~40.5	AC110V	Plug type	Active	Yes	No	100~120PF
T3	92*44	7.2~40.5	/	Plug type	/	Yes	Yes	100~120PF
T3A	92*44	7.2~40.5	/	Plug type	/	No	No	100~120PF
T3B	92*44	7.2~40.5	/	Plug type	/	Yes	No	100~120PF
Q1	92*44	7.2~40.5	AC220V	Plug type	Active	Yes	Yes	100~120PF
Q2	92*44	7.2~40.5	DC110V	Plug type	Active	Yes	Yes	100~120PF
Q3	92*44	7.2~40.5	DC220V	Plug type	Active	Yes	Yes	100~120PF
Q4	92*44	7.2~40.5	AC/DC110~220V	Plug type	No	Yes	Yes	100~120PF
Q4A	92*44	7.2~40.5	AC/DC110~220V	Plug type	No	No	No	100~120PF
Q4B	92*44	7.2~40.5	AC/DC110~220V	Plug type	No	Yes	No	100~120PF

DXN−Q8Live display

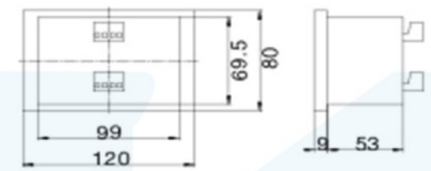

The size of hole 100X70

DXN−T1Live display

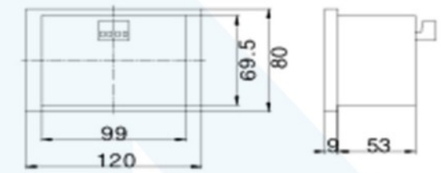

The size of hole 100X70

DXN−T3Live display

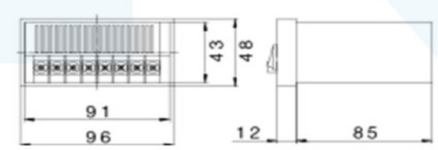

Logo

■ Swing in and out logo: 8XS.866.015

■ Note: sticker

■ Swing in and out logo for 8XS.869.001

■ Note: plastic

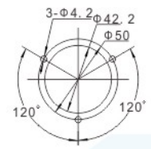

■ Hole dimensions diagram

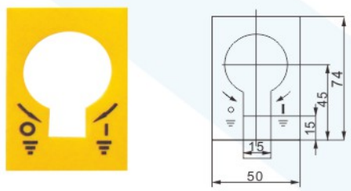

■ Earthing switch logo: 8XS.860.010

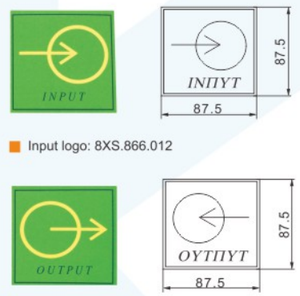

■ Input logo: 8XS.866.012

■ Output logo: 8XS.866.014

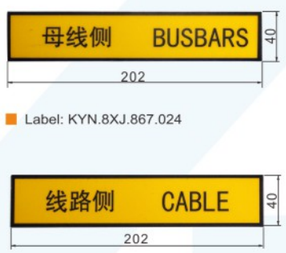

■ Label: KYN.8XJ.867.024

■ Label: KYN.8XJ.867.023

■ Label: KYN.8XJ.867.083

■ Label: KYN.8XJ.867.082

■ Emergency release label : KYN.8XJ.869.014.3

■ Label: KYN.8XY.867.082.21XJD

Type meaning:

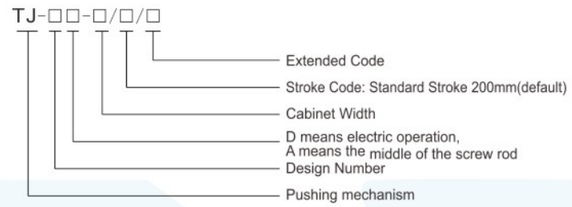

■ **Application:**

As an accessory of KYN61-40 switch cabinet, the pushing mechanism is used to push removable devices such as ZN85 series circuit breakers, various handcarts, etc.

Usage

This pushing mechanism is the for KYN61-40.5 switchgear,for ZN85, VCB series and other kinds of movable parts.

TJ-1-1400 Pushing mechanism (for ZN85)

■ Configuration and installation dimensions for TJ-1-1400 pushing mechanism

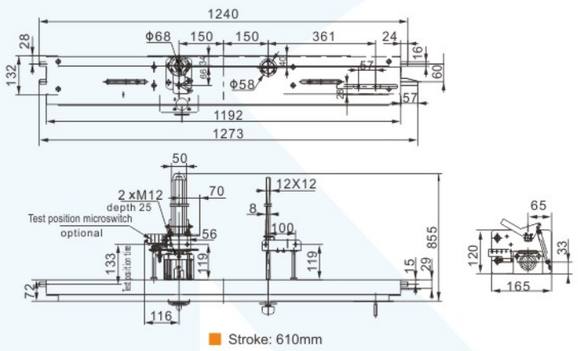

■ Stroke: 610mm

TJ-3-□ Pushing mechanism (for VD4-40.5 handcart)

■ Stroke: 450mm

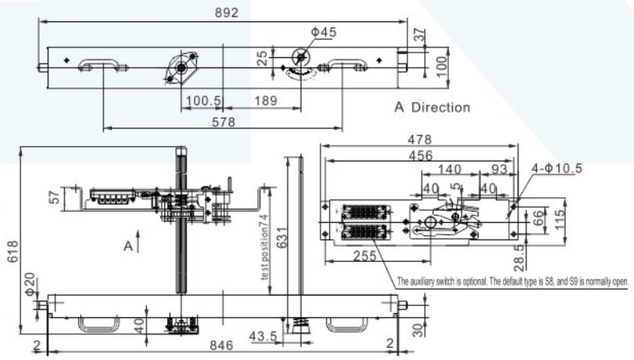

■ Configuration and installation dimensions for TJ-3-1200 pushing mechanism

Pushing Mechanism

TJ-4-□Pushing mechanism (for ZN85B)

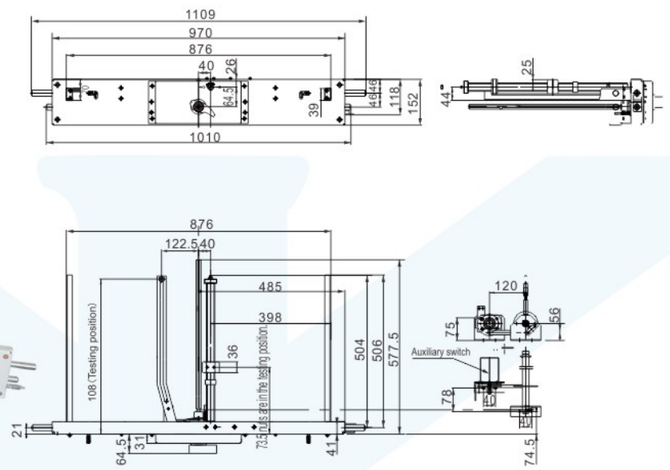

■ Stroke: 400mm

■ Configuration and installation dimensions for TJ-4-1400 pushing mechanism

TJ-7-1400 Pushing mechanism

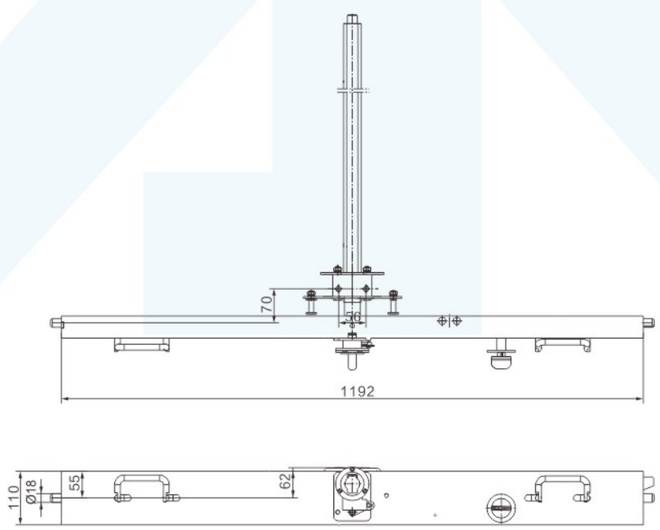

Stroke X510

Configuration and installation dimensions for TJ-1D-1400 electric pushing mechanism (suitable for 3AV3)

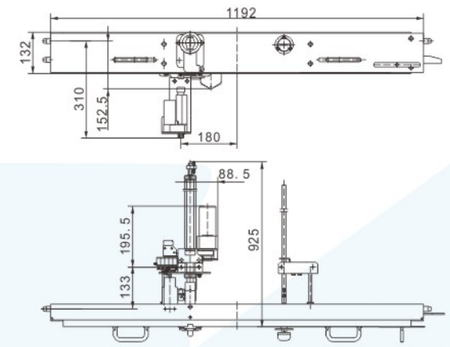

■ Stroke: 610mm, for ZN85

■ Assorted control module DTJ-1

Configuration and installation dimensions for TJ-3D-1200 electric pushing mechanism

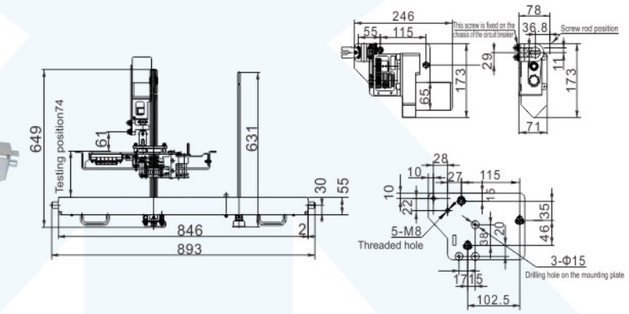

■ Assort control module DTJ-3

DPC-40.5-1200 chassis truck

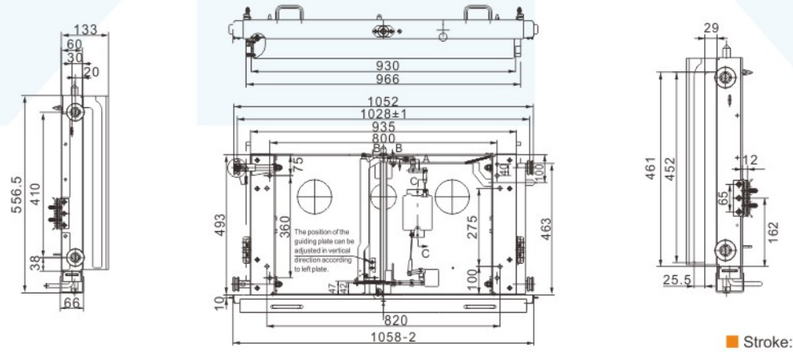

■ Stroke: 440mm

KYN61 Flap mechanism(Linkage type) KYN.5XJ.320.041

If you want the recommend printing as picture, Let us know when making order

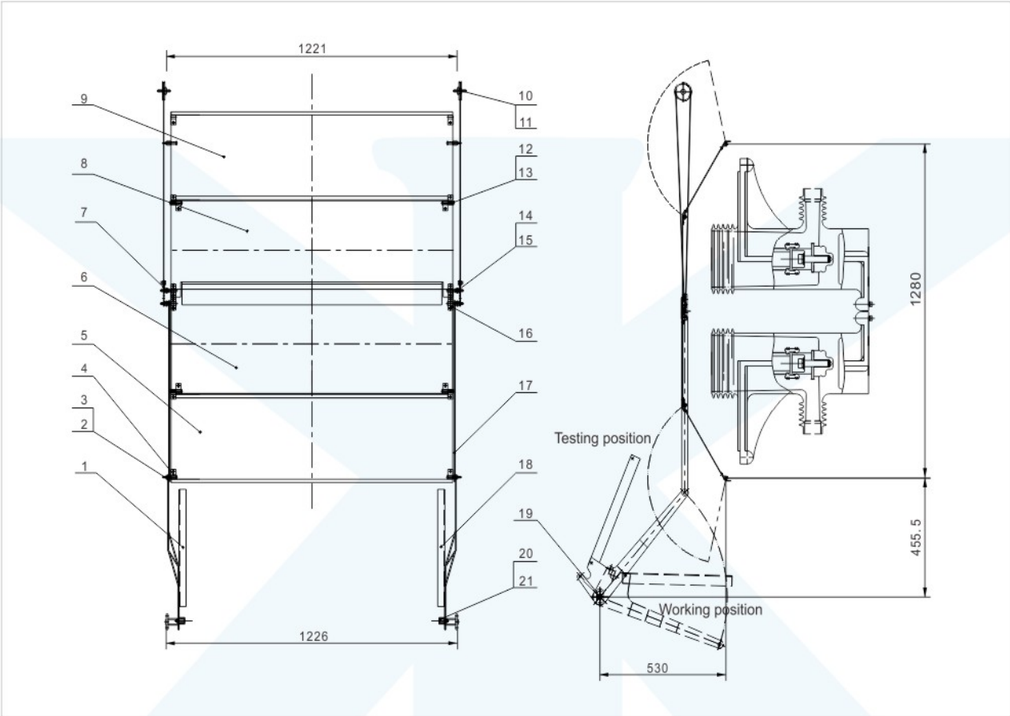

Components list

No.	Item	Code	Qty
1	Big link rod welding(left)	KYN. 6XJ.364.1523	1
2	Flap rod	KYN. 8XJ.200.1525	4
3	Sleeve	KYN. 8XJ.210.1525	4
4	Binder	KYN. 8XJ.211.1521	12
5	Flap plate	KYN. 8XJ.320.1524	1
6	Flap plate	KYN. 8XJ.320.1522	1
7	Plate fixed by linkage	KYN. 8XJ.050.1521	4
8	Flap plate	KYN. 8XJ.320.1523	1
9	Flap plate	KYN. 8XJ.320.1521	1
10	Pulley shaft	KYN. 8XJ.200.1524	2
11	Pulley	KYN. 8XJ.224.1522	2

No.	Item	Code	Qty
12	Flap shaft	KYN.8XJ.200.1531	4
13	Screw rod	KYN.8XJ.200.1532	4
14	Screw rod	KYN.8XJ.200.1526	4
15	Roller	KYN.8XJ.224.1521	4
16	Binder	KYN.8XJ.211.1522	4
17	Little link rod	KYN.8XJ.174.1523	2
18	Big link rod welding	KYN.6XJ.364.1522	1
19	Shaft support	KYN.8XJ.210.1521	2
20	Sleeve	KYN.8XJ.210.1523	2
21	Screw	KYN.8XJ.920.1522	2

KYN61 Flap mechanism KYN.5XJ.320.051(1400)

If you want the recommend printing as picture, Let us know when making order

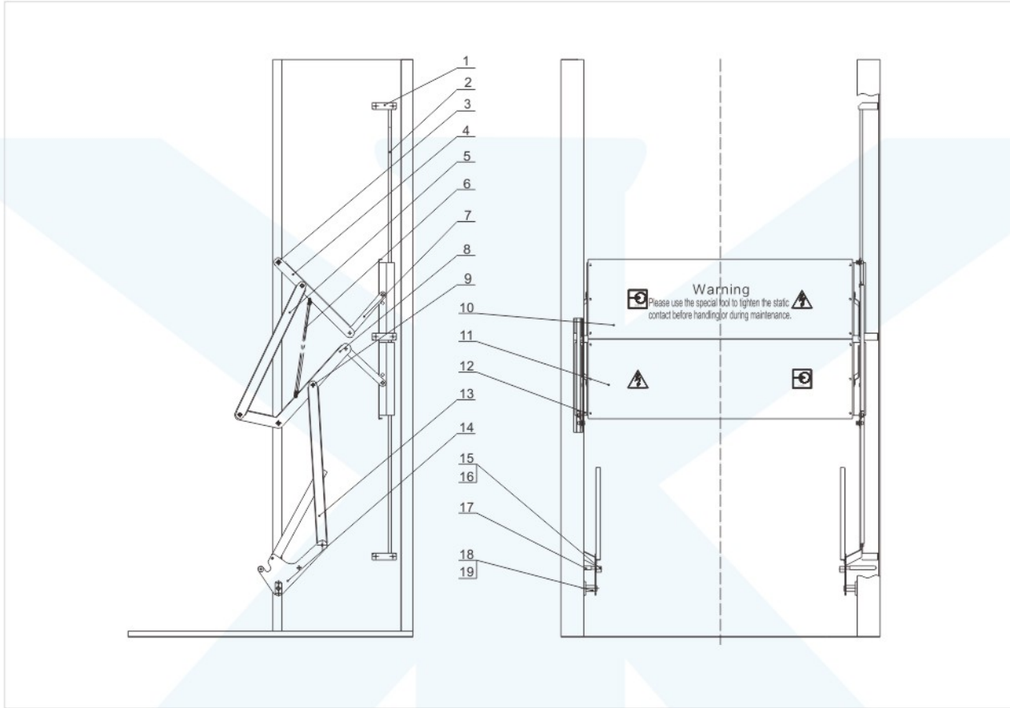

Components list

No.	Item	Code	Qty
1	Bending plate	KYN.8XJ.210.1536	4
2	Guide bar	KYN.8XJ.174.1524	2
3	Threaded pin	KYN.8XJ.210.1528.1	4
4	Left and right welding inter rob	KYN.5XJ.210.1536 KYN.5XJ.210.1537	各1
5	Connecting rod welding	KYN.5XJ.174.1523	2
6	Tension spring	KYN.8XJ.288.145	2
7	linking plate	KYN.8XJ.210.1531	4
8	left and right liking welding	KYN.5XJ.210.1532 KYN.5XJ.210.1532	各1
9	cabinet door	KYN.8XJ.993.248	16

No.	Item	Code	Qty
10	Flap plate	KYN.8XJ.320.1521.11	1
11	Bracket	KYN.8XJ.210.1530	4
12	Lower linking welding	KYN.5XJ.210.1534	2
13	large linking plate (left and right)	KYN.5XJ.364.1522.6 KYN.5XJ.364.1523.6	各1
14	Set	KYN.8XJ.210.1523	2
15	Screw	KYN.8XJ.920.1522	2
16	Position rob	KYN.8XJ.234.071.1	2
17	Screw	KYN.8XJ.200.1521.2	2
18	Shaft sleeve	KYN.8XJ.210.1521	2

Interlock device KYN.5XJ.363.021for earthing switch operating mechanism

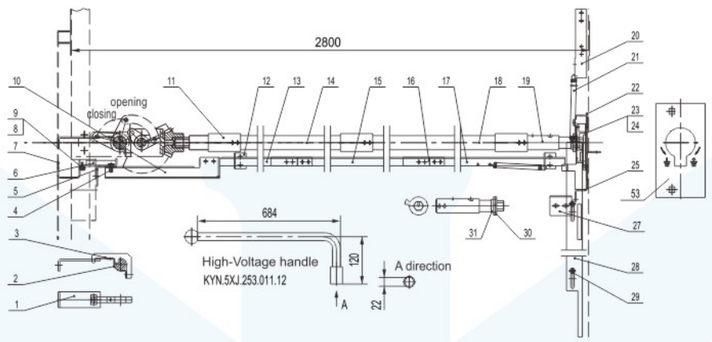

Components list

No.	Item	Code	Qty
1	Backdoor interlock plate	KYN.8XJ.264.1510	1
2	Backdoor interlock plate	KYN.8XJ.264.1512	1
3	Lock bail	KYN.8XJ.264.1511	1
4	Screw rod	KYN.8XJ.200.1533	1
5	Support	KYN.8XJ.038.1533	1
6	Linking plate	KYN.8XJ.264.1508	1
7	Interlock plate	KYN.8XJ.264.1509	2
8	Screw	8XS.900.033	1
9	Washer	DPC.8XJ.210.314.2	1
10	Slotting plate	KYN.8XJ.623.1512	1
11	Link shaft sleeve	KYN.8XJ.210.1527	3
12	Support	KYN.8XJ.038.1534	1
13	Bending plate	KYN.8XJ.623.1516	1
14	Earthing switch operating shaft	KYN.8XJ.200.1511	1
15	Bending plate	KYN.8XJ.623.1515	1
16	Link plate	KYN.8XJ.264.1507	2

No.	Item	Code	Qty
17	Bending plate	KYN.8XJ.623.1514	1
18	Earthing switch operating shaft	KYN.8XJ.200.1512	1
19	Earthing switch operating shaft	KYN.8XJ.200.1513	1
20	Spring support	KYN.8XJ.038.1536	1
21	Tension spring	8XS.282.016	3
22	Slide block	KYN.8XJ.143.1529	2
23	Support	KYN.8XJ.200.1529	1
24	Support plate	KYN.8XJ.143.1530	1
25	Bending plate	KYN.8XJ.628.1525	1
26	Earthing switch sign	KYN.8XJ.200.1530	1
27	Latching electromagnet	KYN.8XJ.038.1549	1
28	Interlock rod	KYN.8XJ.200.1514	1
29	Nut	KYN.8XJ.940.1500	2
30	Sector plate	KYN.8XJ.192.1510	2
31	Washer	KYN.8XJ.950.1522	1

Configuration and installation dimensions for KYN.8XJ.201.1502

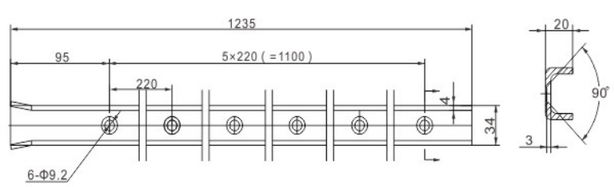

KYN61Earthing switch operation mechanism interlock device(bidirectional bevel gear)KYN.5XJ.363.022(2800)

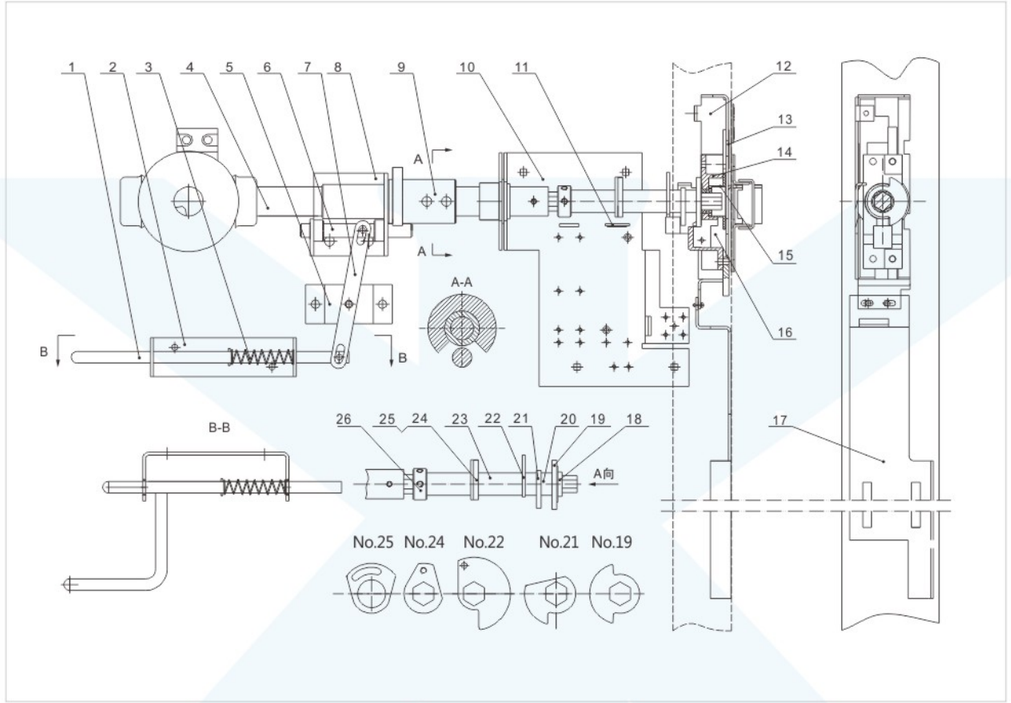

Components list

Serial number	Name	Code	Quantity pcs/set
1	Push rod welding	KYN.5XJ.235.119	1
2	Fixed plate	KYN.8XJ.233.048	1
3	Compression spring	8XS.282.021	1
4	Operating shaft	KYN.5XJ.200.130	1
5	Bracket welding	KYN.5XJ.043.045	1
6	Limit shaft	KYN.8XJ.205.129	1
7	Connecting plate	KYN.8XJ.233.047	1
8	Mounting plate welding	KYN.5XJ.062.026	1
9	Limit sleeve welding	KYN.5XJ.210.012	1
10	Bending plate	KYN.8XJ.161.076	1
11	Slotting plate	8XS.151.044	1
12	Bending plate	8XS.161.059	1
13	Label	KYN.8XJ.867.029	1

Serial number	Name	Code	Quantity pcs/set
14	Support	5XS.043.022	1
15	Cover plate	8XS.017.011.2	1
16	Slide block	8XS.143.010	2
17	Bending plate	KYN.8XJ.161.134	1
18	Bearing	8XS.263.011	1
19	Limit board	8XS.151.084	1
20	Set	8XS.210.14.9/HL	2
21	Sector plate	KYN.8XJ.192.012	1
22	Sector plate	KYN.8XJ.192.013	1
23	Set	8XS.210.014.10/HL	2
24	Stop collar	8XS.151.043	1
25	Sector plate	8XS.151.042	1
26	Limit board	8XS.210.322	1

KYN.5XJ.320.031(Cabinet Width 1200mm) Guiding rail flap mechanism device

If you want the recommend printing as picture, Let us know when making order

No.1, No.6

No.14, No.15

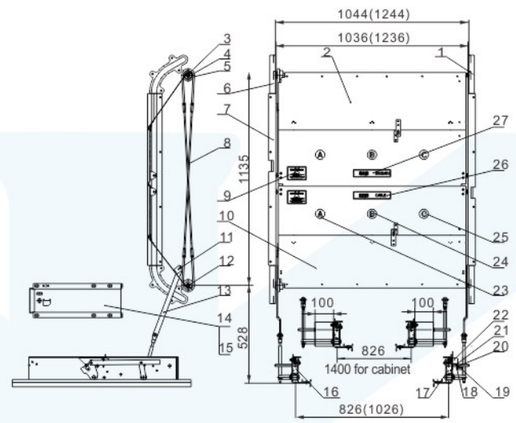

Components list

Serial number	Name	Code	Quantity pcs/set
1	Guiding slot	KYN.8XJ.357.001	2
2	Upper flap assembly	KYN.5XJ.320.275.18	1
3	Shaft sleeve	KYN.8XJ.211.095	3
4	Copper shaft	KYN.8XJ.211.096	2
5	Pin	KYN.8XJ.993.080	2
6	Guiding slot	KYN.8XJ.357.002	2
7	Guiding slot	KYN.8XJ.357.003	2
8	Chain assembly	KYN.5XJ.294.001	1
9	Scutcheon	KYN.8XJ.867.028	2
10	Down flap assembly	KYN.5XJ.320.275.19	1
11	Pin	KYN.8XJ.993.082	2
12	Pin	KYN.8XJ.993.081	2
13	Link rod	KYN.8XJ.174.041	2
14	Locating plate	KYN.8XJ.271.046	1

Serial number	Name	Code	Quantity pcs/set
15	Locating plate	KYN.8XJ.271.049	1
16	Left guiding rail assembly	KYN.5XJ.260.014	1
17	Right guiding rail assembly	KYN.5XJ.260.015	2
18	Nut	KYN.8XJ.950.044	1
19	Sleeve	KYN.8XJ.211.098	1
20	Link rod	KYN.8XJ.174.036	1
21	Sleeve	KYN.8XJ.211.097	1
22	Locking plate	KYN.8XJ.141.047	1
23	Scutcheon	KYN.8XJ.867.025	2
24	Scutcheon	KYN.8XJ.867.026	2
25	Scutcheon	KYN.8XJ.867.027	2
26	Scutcheon	KYN.8XJ.867.023	1
27	Scutcheon	KYN.8XJ.867.024	1

Earthing bar

■ Earthing bar KYN.8XJ.588.006

Earthing switch operation mechanism interlock device (bidirectional bevel gear)KYN.5XJ.362.015(2600)

If you want the recommend printing as picture, Let us know when making order

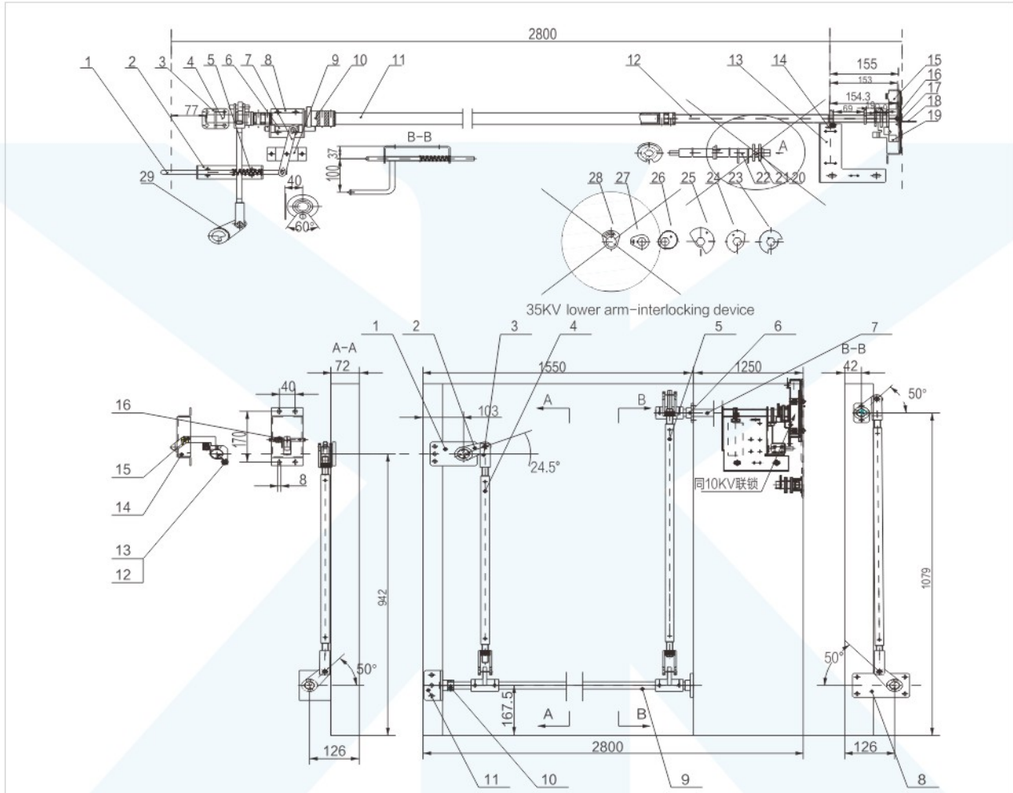

Components list

Serial number	Name	Code	Quantity pcs/set
1	Push rod welding	KYN.5XJ.235.119	1
2	Fixed plate	KYN.8XJ.233.048	1
3	Compression spring	8XS.282.021	1
4	Operating shaft	KYN.5XJ.200.130	1
5	Bracket welding	KYN.5XJ.043.045	1
6	Limit shaft	KYN.8XJ.205.129	1
7	Connecting plate	KYN.8XJ.233.047	1
8	Mounting plate welding	KYN.5XJ.062.026	1
9	Limit sleeve welding	KYN.5XJ.210.012	1
10	Bending plate	KYN.8XJ.161.076	1
11	Slotting plate	8XS.151.044	1
12	Earthing stroke device	KYN.5XJ.362.013	1
13	Bending plate	8XS.161.059	1
14	Label	KYN.8XJ.867.029	1

Serial number	Name	Code	Quantity pcs/set
15	Support	5XS.043.022	1
16	Cover plate	8XS.017.011.2	1
17	Slide block	8XS.143.010	2
18	Connecting plate welding	KYN.5XJ.174.033	1
19	Earthing & chassis interlock device	KYN.5XJ.362.012	1
20	Bearing	8XS.263.011	1
21	Limit board	8XS.151.084	1
22	Set	8XS.210.14.9/HL	2
23	Sector plate	KYN.8XJ.192.012	1
24	Sector plate	KYN.8XJ.192.013	1
25	Set	8XS.210.014.10/HL	2
26	Sector plate	8XS.151.043	1
27	Sector plate	8XS.151.042	1
28	Stop collar	8XS.210.322	1

Types and installation dimensions for high-voltage primary static contact

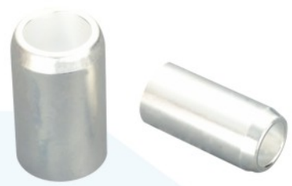

high-voltage primary static contact

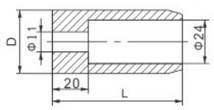

Type	D	L
8WXJ. 551. 001	35	72
8WXJ. 551. 002		82
8WXJ. 551. 003	49	72
8WXJ. 551. 004		82

(4) Configuration and installation dimensions for 8XL.551.001~004

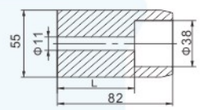

Type	L
8WXJ. 551. 005	55
8WXJ. 551. 006	20

(5) Configuration and installation dimensions for 8XL.551.005~006

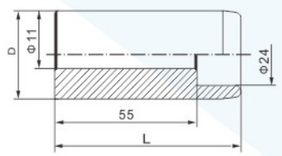

Type	D	L
8WXJ.551.020.1	35	72
8WXJ.551.020.2	49	82

(1) Configuration and installation dimensions for 8XL.551.020.1~2

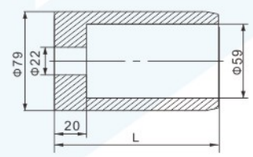

Type	L
8WXJ.551.007	102
8WXJ.551.008	107

(6) Configuration and installation dimensions for 8XL.551.007~008

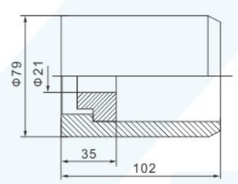

2 Configuration and installation dimensions for 8XL.551.010

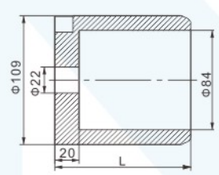

Type	L
8WXJ. 551. 009	107
8WXJ. 551. 010	102

(7) Configuration and installation dimensions for 8XL.551.009~010

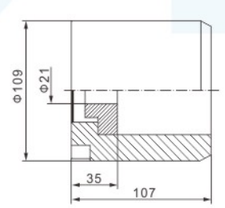

(3)Configuration and installation dimensions for 8XL.551.011

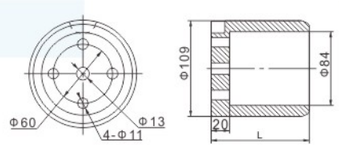

Type	L
8WXJ. 551. 011	107
8WXJ. 551. 012	112

(8)Configuration and installation dimensions for 8XL.551.011~12

MTC-630A~4000A series club contact tip

Configuration and installation dimensions for CT-630A~4000A series club contact

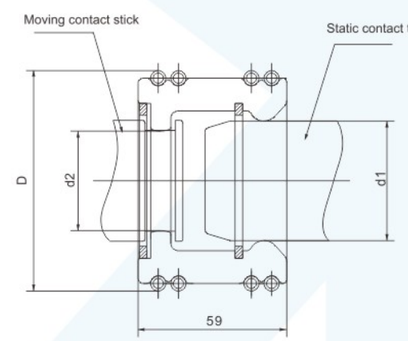

MCT630A~1600A

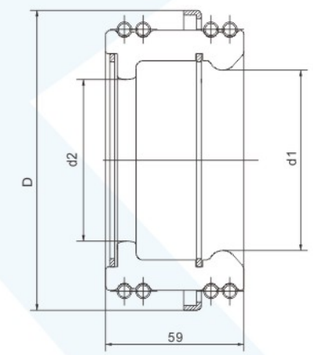

MCT2000A~4000A

CT-630A~3150A series club contact tip

No.	Type	Contact plate No.	D	d1	d2	The diameter for static contact	The diameter of fixedgroove for moving conta ct	Remark
1	MCT-630A-12	12	Φ74	Φ33.5	Φ26	Φ35	Φ28	
2	MCT-630A-24	24	Φ74	Φ33.5	Φ26	Φ35	Φ28	
3	MCT-1250A-30	30	Φ88	Φ47.5	Φ40	Φ49	Φ42	
4	MCT-1600A-36	36	Φ94	Φ53.5	Φ46	Φ55	Φ48	
5	MCT-2000/2500A-48	48	Φ128	Φ77.5	Φ70	Φ79	Φ72	
6	MCT-2500/3150A-64	64	Φ158	Φ107.5	Φ100	Φ109	Φ102	
7	MCT-4000A-82	82	Φ158	Φ107.5	Φ100	Φ109	Φ102	

JNseries indoor high-voltage AC earthing switch

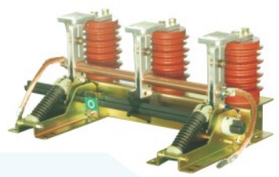

JN15-12/T31.5

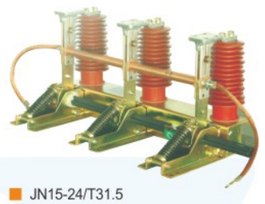

JN15-24/T31.5

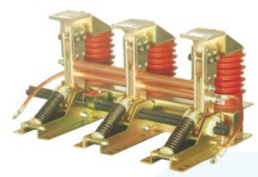

JN17-12/T40

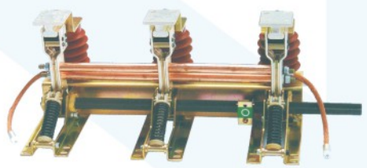

JN17-12/T50

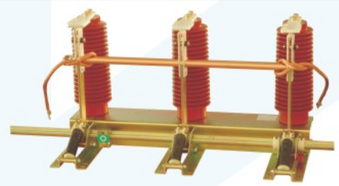

JN22B-40.5/T31.5

Main technical parameters

1	Code	JN15	JN17	JN22B
2	Rated voltage	12kV~24kV	12kV	40.5kV
3	Rated Moment baring Amber(4S)	31.5kA	40kA、50kA	31.5kA
4	Rated highest moment amber	80kA	100kA、125kA	80kA
5	Rated highest moment amber	80kA	100kA、125kA	80kA
6	insulation level: The main circuit operator frequency tolerable voltageRated lighting impulse withstand voltage	42kV、65kV 75kV、125kV	42kV 75kV	95kV 80kV
7	the shortest distance of Break-brake	125mm、200mm	125mm	300mm

Dimension of outlook and installation and the busbar

Dimension of the JN15-12/T31.5

Outlook and installation dimension

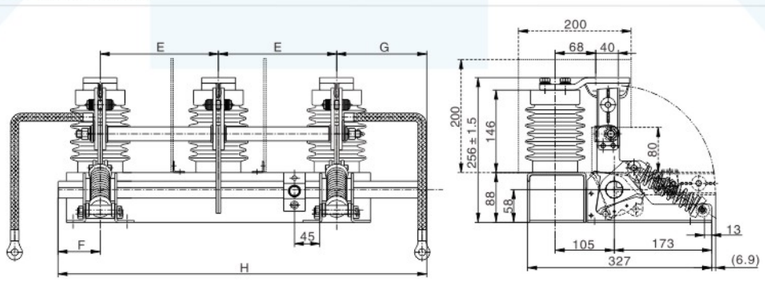

Installation of the holes

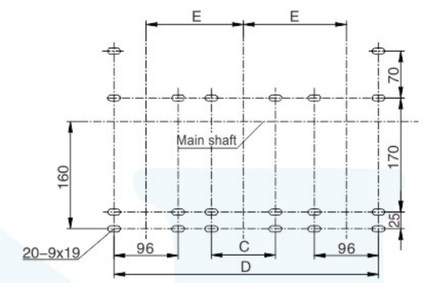

Add Insulating clapboard when the distance is less than 150

Type	E	F	G	H	D	C
JN15-12/T31.5-275	275	75	185	810	646.5	96
JN15-12/T31.5-250	250	75	160	735	596.5	96
JN15-12/T31.5-230	230	75	160	695	556.5	
JN15-12/T31.5-220	220	75	160	675	536.5	
JN15-12/T31.5-210	210	75	160	655	516	
JN15-12/T31.5-200	200	75	160	635	496.5	
JN15-12/T31.5-180	180	75	160	595	456.5	
JN15-12/T31.5-165	165	75	160	565	426.5	
JN15-12/T31.5-150	150	75	140	515	396.5	

Dimension of the bus-bar clamp

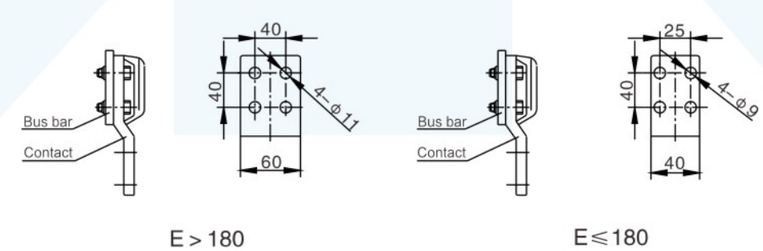

The dimension of the earthing switch JN17-12/T31.5

■ Outlook and dimension

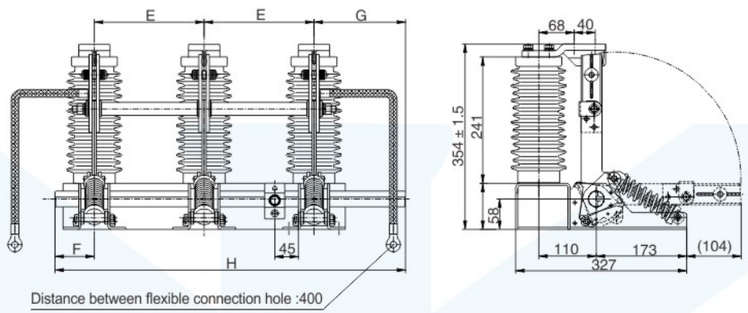

■ Installation of the holes

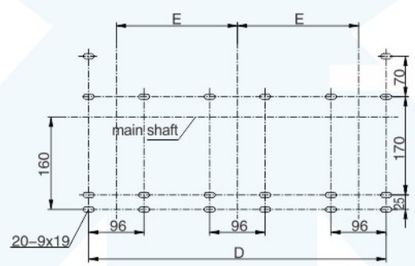

Type	E	F	G	H	D
JN15–24/T31.5–275	275	75	185	810	646
JN15–24/T31.5–210	210	75	160	655	516

■ Add clapboard when the distance is less than 210

■ Dimension of the static contact

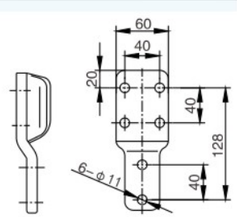

The dimension of the earthing switch JN17-12/T40

■ Outlook and dimension

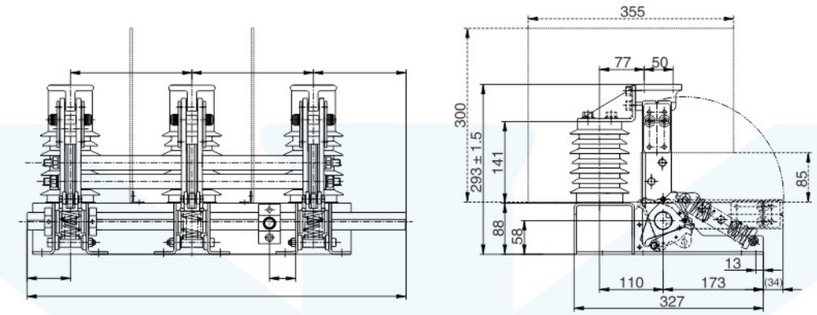

■ Installation of the hole

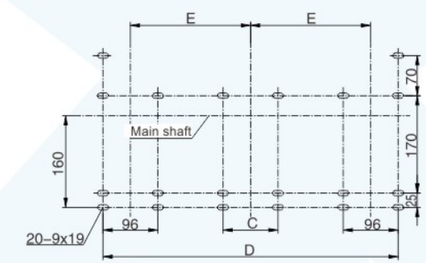

■ Add Insulating clapboard when the distance is less than 210

Type	E	F	G	H	D	C
JN17–12/T40–275	275	75	185	810	646.5	96
JN17–12/T40–250	250	75	160	735	596.5	96
JN17–12/T40–230	230	75	160	695	556.5	
JN17–12/T40–220	220	75	160	675	536.5	
JN17–12/T40–210	210	75	160	655	516	
JN17–12/T40–150	150	75	140	515	396.5	

■ Dimension of the static contant

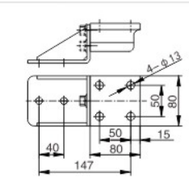

The dimension of the earthing switch JN17-12/T50

■ Outlook and dimension

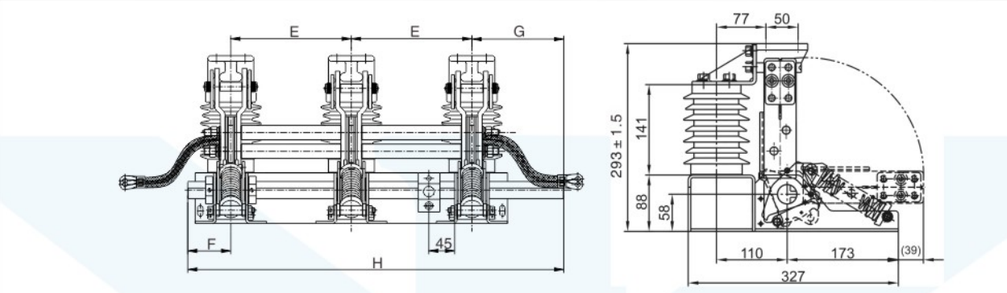

■ Installation of the hole

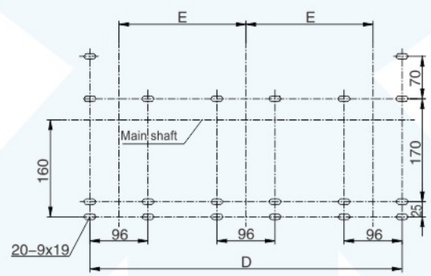

■ Add Insulating clapboard when the distance is less than 210

Type	E	F	G	H	D
JN17–12/T50–275	275	75	185	810	646
JN17–12/T50–250	250	75	160	735	596
JN17–12/T50–230	230	75	160	695	556
JN17–12/T50–210	210	75	160	655	516

■ Dimension of the static contant

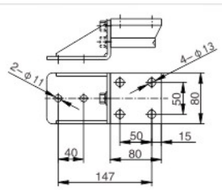

The dimension and outlook of JN228-45.0/T31.5

■ Outlook and dimension for installation

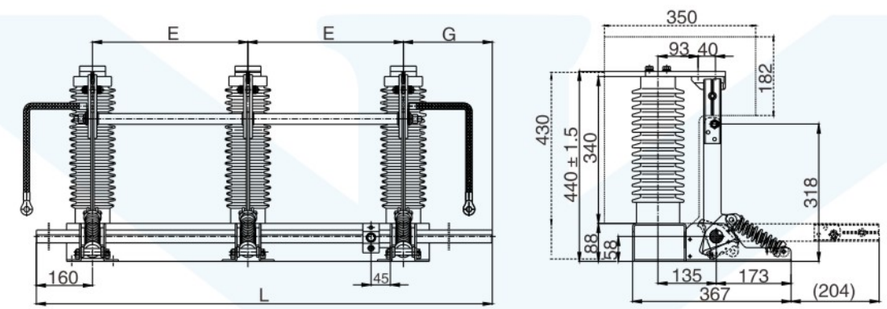

■ The holes

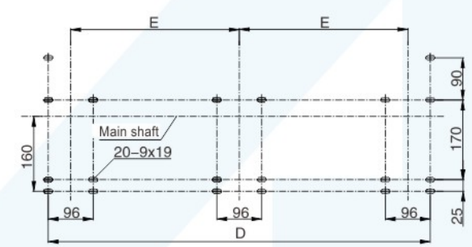

■ Add Insulating clapboard when the distance is less than 360

Code	E	G	L	D
JN22B–40.5/T31.5–280	280	290	1010	656
JN22B–40.5/T31.5–300	300	340	1100	696
JN22B–40.5/T31.5–350	350	340	1200	796
JN22B–40.5/T31.5–360	360	320	1200	816
JN22B–40.5/T31.5–400	400	340	1300	896

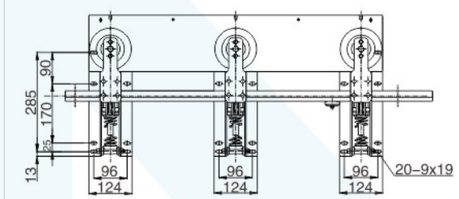

■ The dimension of fixed contact

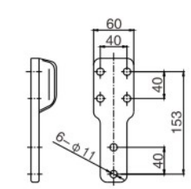

Indoor high-voltage VCB ZN63S-12

■ The dimension(the handcart type)

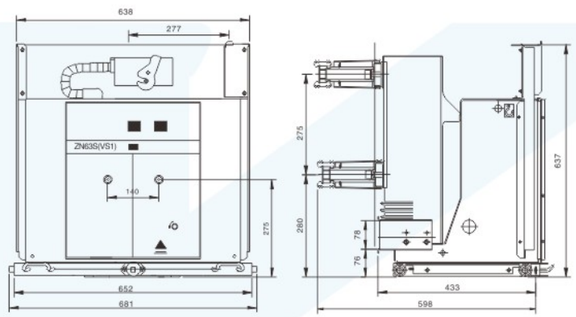

■ The fixed type

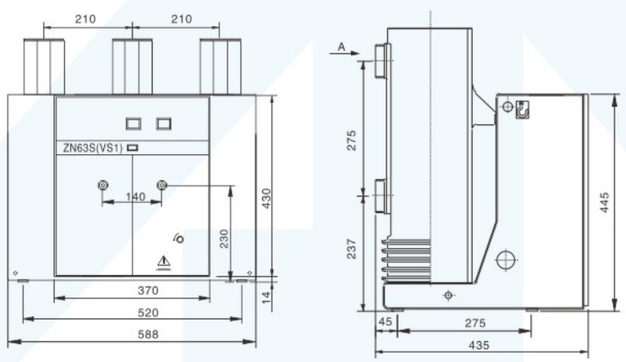

■ The shotest distance of closing state of moving contact and fixed contact is 15mm

Rated Amber	630	1250	1600
Rated short circuit current	20,25, 31.5	25, 31.5	31.5
appointed size of fixed contact	35	49	55

The dimension(the handcart type)

■ the side-installation dimension

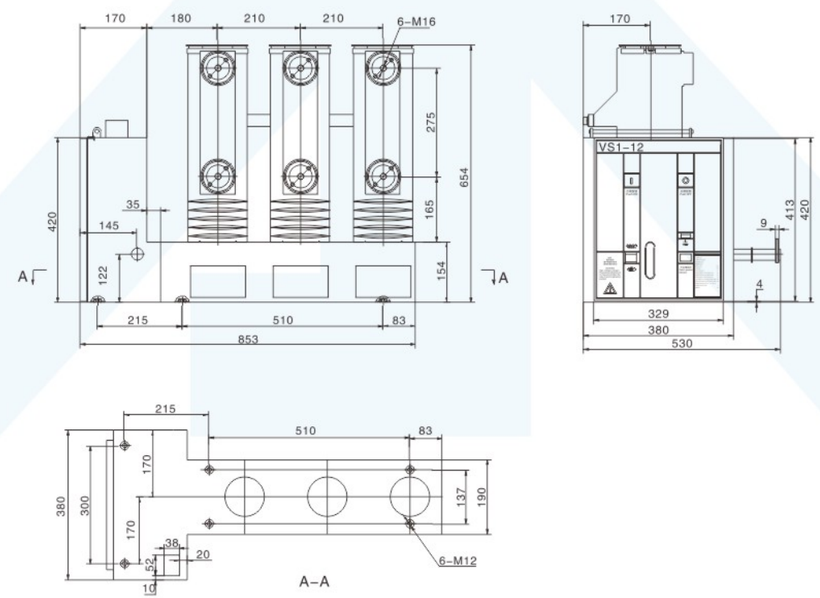

Vacuum circuit breaker

High voltage live display sensor series

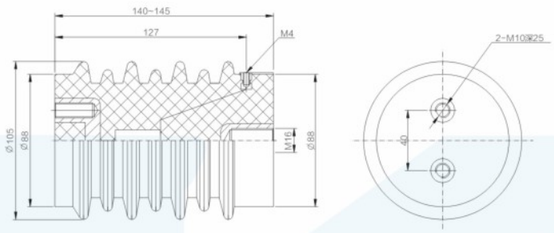

CG-12/105x140~145 （WT.103）

Technical parameters：

The rated voltage：12KV	Power frequency withstand voltage：42KV	Partial discharge≤3PC	Capacitance：125PF

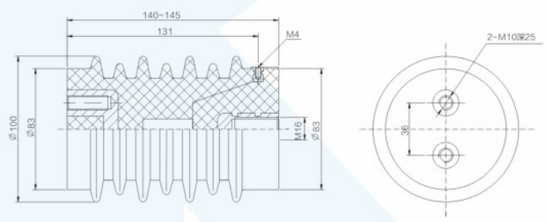

CG-12/100x140~145 （WT.106）

Technical parameters：

The rated voltage：12KV	Power frequency withstand voltage：42KV	Partial discharge≤3PC	Capacitance：125PF

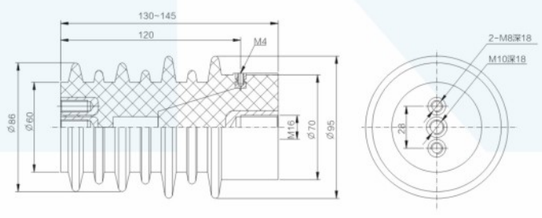

CG-12/95x130~145 （WT.107）

Technical parameters：

The rated voltage：12KV	Power frequency withstand voltage：42KV	Partial discharge≤3PC	Capacitance：125PF

兴机电器
XINGJI ELECTRICAL

High voltage live display sensor series

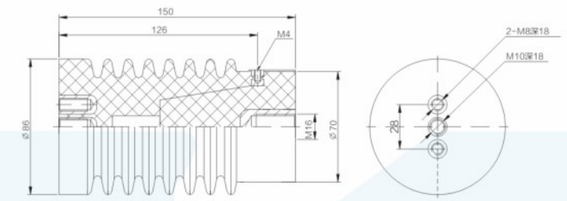

CG-12/86x140~150 （WT.109）

Technical parameters：

The rated voltage：12KV	Power frequency withstand voltage：42KV	Partial discharge≤3PC	Capacitance：125PF

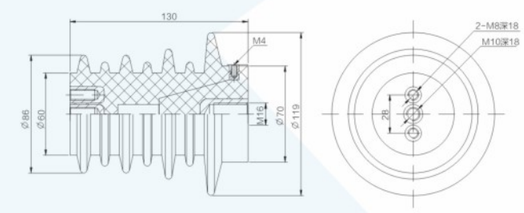

CG-12/119x130 （WT.110）

Technical parameters：

The rated voltage：12KV	Power frequency withstand voltage：42KV	Partial discharge≤3PC	Capacitance：125PF

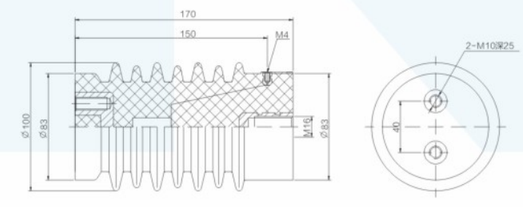

CG-12/100x160~170 （WT.111）

Technical parameters：

The rated voltage：12KV	Power frequency withstand voltage：55KV	Partial discharge≤3PC	Capacitance：125PF

High voltage live display sensor series

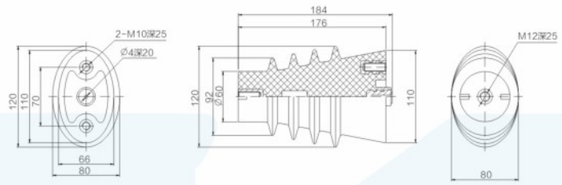

CG-12/110x184（WT.112）

Technical parameters：

The rated voltage：12KV	Power frequency withstand voltage：42KV	Partial discharge≤3PC	Capacitance：125PF

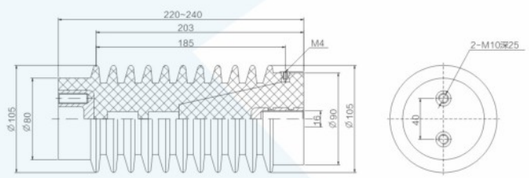

CG-24/105x220~240（WT.113）

Technical parameters：

The rated voltage：24KV	Power frequency withstand voltage：65KV	Partial discharge≤3PC	Capacitance：80PF

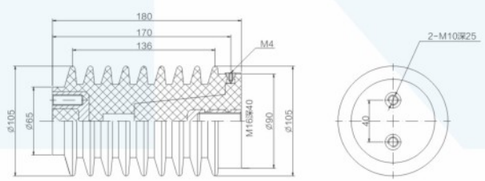

CG-24/105x180（WT.114）

Technical parameters：

The rated voltage：24KV	Power frequency withstand voltage：65KV	Partial discharge≤3PC	Capacitance：80PF

High voltage live display sensor series

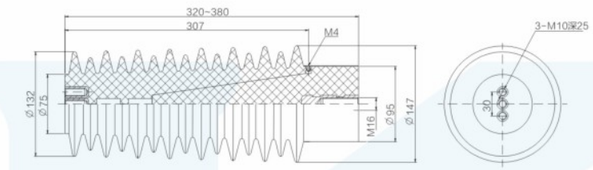

CG-40.5/147x320~380（WT.115）

Technical parameters：

The rated voltage：40.5KV	Power frequency withstand voltage：95KV	Partial discharge≤3PC	Capacitance：45PF

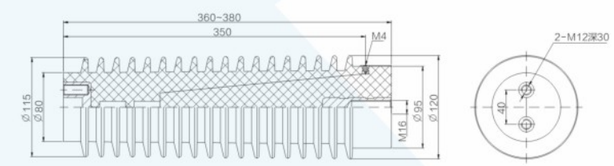

CG-40.5/120x360~380（WT.117）

Technical parameters：

The rated voltage：40.5KV	Power frequency withstand voltage：95KV	Partial discharge≤3PC	Capacitance：45PF

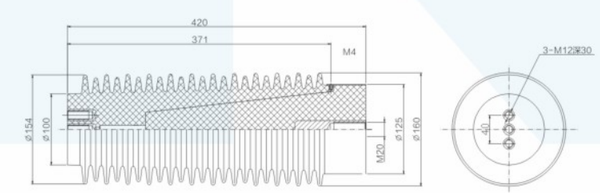

CG-40.5/160x420（WT.118）

Technical parameters：

The rated voltage：40.5KV	Power frequency withstand voltage：136KV	Partial discharge≤3PC	Capacitance：45PF

High voltage live display sensor series

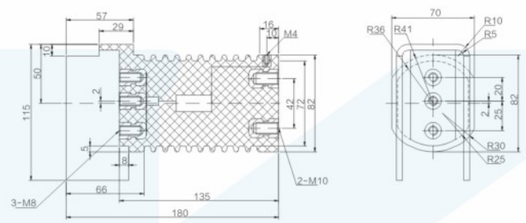

CGZ-12/115x180 （WT.122）

Technical parameters：

The rated voltage：12KV	Power frequency withstand voltage：42KV	Partial discharge≤3PC	Capacitance：125PF

Special reminder:

The size of the sensor series and insulator series produced by the company can be universal, that is, the size of the sensor can be made into an insulator, the size of the insulator can also be made into a sensor. The height of the sensor and insulator can be fine-tuned on the basis of the existing size in the sample, and the hole spacing and size of both ends can be customized.

Insulator series

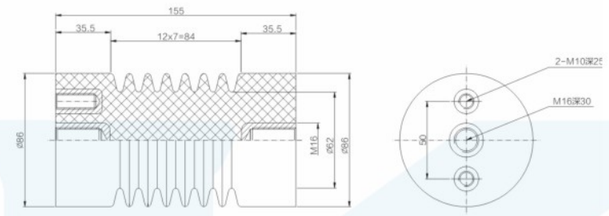

ZJ-12/86x140~155 （WT.202）

Technical parameters：

The rated voltage：12KV	Power frequency withstand voltage：42KV	Partial discharge≤3PC

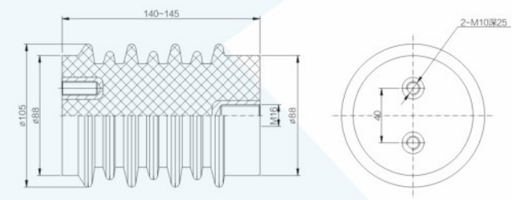

ZJ-12/105x140~145 （WT.206）

Technical parameters：

The rated voltage：12KV	Power frequency withstand voltage：42KV	Partial discharge≤3PC

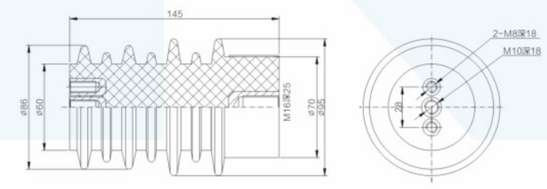

ZJ-12/95x130~145 （WT.210）

Technical parameters：

The rated voltage：12KV	Power frequency withstand voltage：42KV	Partial discharge≤3PC

Insulator series

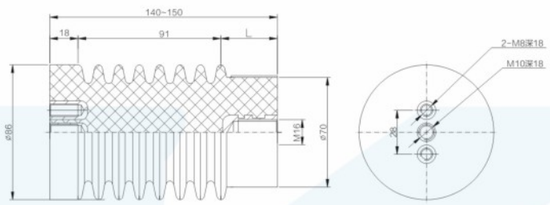

ZJ-12/86x140~150 （WT.212）

Technical parameters：

The rated voltage：12KV	Power frequency withstand voltage：42KV	Partial discharge≤3PC

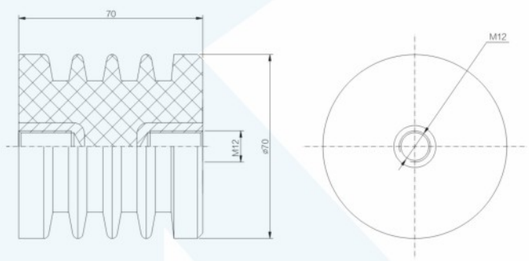

ZJ-12/70x70 （WT.213）

Technical parameters：

The rated voltage：12KV	Power frequency withstand voltage：42KV	Partial discharge≤3PC

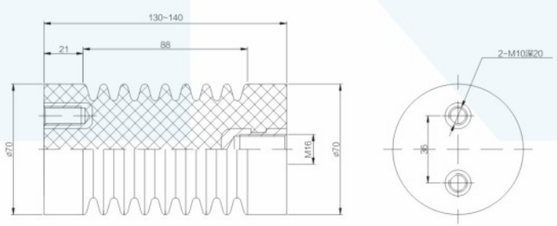

ZJ-12/70x130~140 （WT.215）

Technical parameters：

The rated voltage：12KV	Power frequency withstand voltage：42KV	Partial discharge≤3PC

Insulator series

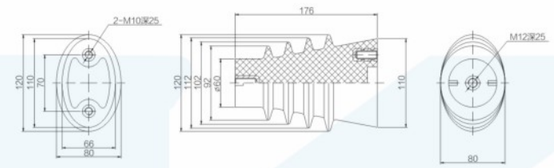

ZJ-12/110x176 （WT.216）

Technical parameters：

The rated voltage：12KV	Power frequency withstand voltage：42KV	Partial discharge≤3PC

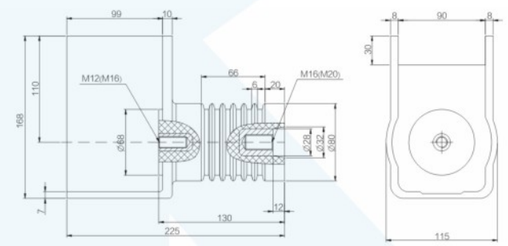

ZJZ1-12/630~1250A （WT.217）

Technical parameters：

The rated voltage：12KV	Power frequency withstand voltage：42KV	Partial discharge≤3PC

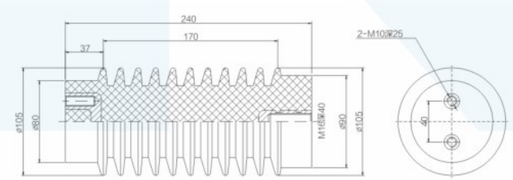

ZJ-24/105x220~240 （WT.219）

Technical parameters：

The rated voltage：24KV	Power frequency withstand voltage：65KV	Partial discharge≤3PC

Insulator series

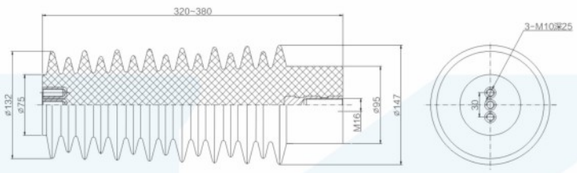

ZJ-40.5/147x320~380 （WT.221）

Technical parameters：

The rated voltage：40.5KV	Power frequency withstand voltage：95KV	Partial discharge≤3PC

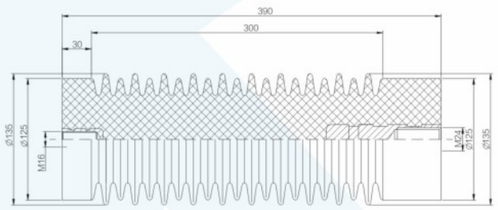

ZJ-40.5/135x390 （WT.222）

Technical parameters：

The rated voltage：40.5KV	Power frequency withstand voltage：95KV	Partial discharge≤3PC

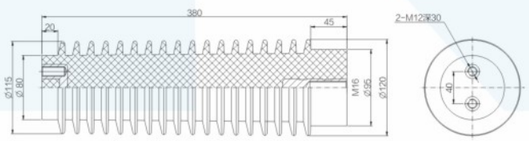

ZJ-40.5/120x380 （WT.223）

Technical parameters：

The rated voltage：40.5KV	Power frequency withstand voltage：95KV	Partial discharge≤3PC

兴机电器
XINGJI ELECTRICAL

Insulator series

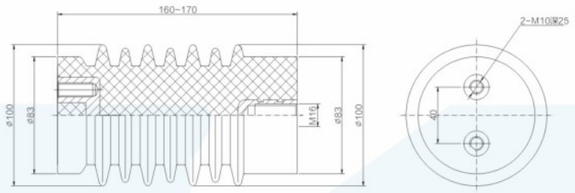

ZJ-12/100x160~170 （WT.227）

Technical parameters：

The rated voltage：12KV	Power frequency withstand voltage：55KV	Partial discharge≤3PC

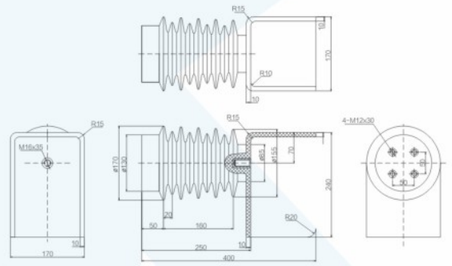

ZNJ7-40.5（WT.235）

Technical parameters：

The rated voltage：40.5KV	Power frequency withstand voltage：95KV	Partial discharge≤3PC

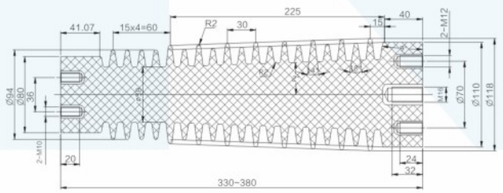

ZJ-40.5/118x330~380 （WT.240）

Technical parameters：

The rated voltage：40.5KV	Power frequency withstand voltage：95KV	Partial discharge≤3PC

Contact box series

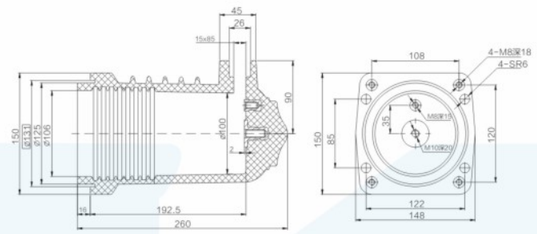

CHN-12/150(630~1250A) （WT.501）

Technical parameters：

The rated voltage：12KV	Power frequency withstand voltage：42KV	Partial discharge≤3PC

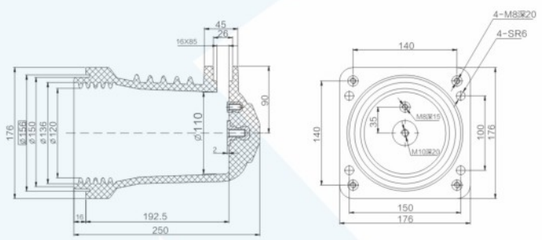

CHN-12/176(1250A) （WT.502）

Technical parameters：

The rated voltage：12KV	Power frequency withstand voltage：42KV	Partial discharge≤3PC

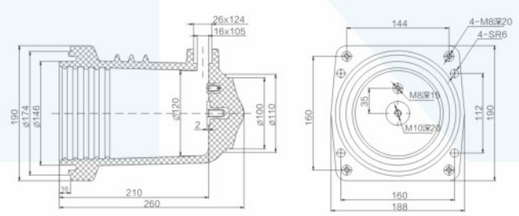

CHN-12/190(1600A) （WT.503）

Technical parameters：

The rated voltage：12KV	Power frequency withstand voltage：42KV	Partial discharge≤3PC

兴机电器
XINGJI ELECTRICAL

Contact box series

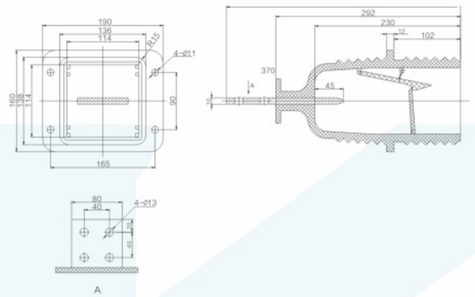

CHN-12/90x165(630A) （WT.504）

Technical parameters：

The rated voltage：12KV	Power frequency withstand voltage：42KV	Partial discharge≤3PC

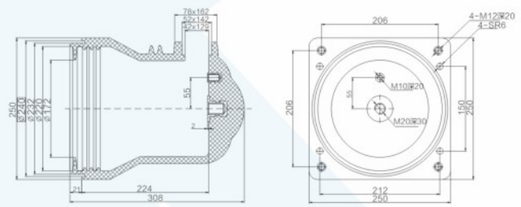

CHN-12/250(3150~4000A) （WT.505-1 two holes）

Technical parameters：

The rated voltage：12KV	Power frequency withstand voltage：42KV	Partial discharge≤3PC

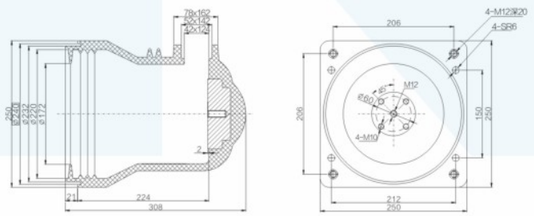

CHN-12/250(3150~4000A) （WT.505-2 five holes）

Technical parameters：

The rated voltage：12KV	Power frequency withstand voltage：42KV	Partial discharge≤3PC

Contact box series

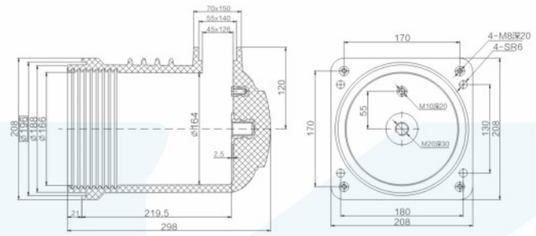

CHN-12/208(2500A) （WT.506）

Technical parameters：

The rated voltage：12KV	Power frequency withstand voltage：42KV	Partial discharge≤3PC

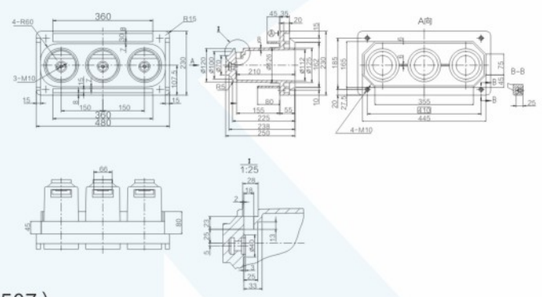

CHN-12/480x230(Three phase one)（WT.507）

Technical parameters：

The rated voltage：12KV	Power frequency withstand voltage：42KV	Partial discharge≤3PC

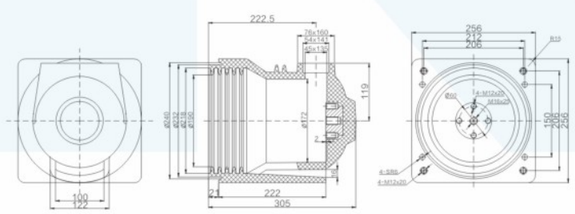

CHN-12/256(4000A)（WT.516）

Technical parameters：

The rated voltage：12KV	Power frequency withstand voltage：42KV	Partial discharge≤3PC

兴机电器 XINGJI ELECTRICAL

Contact box series

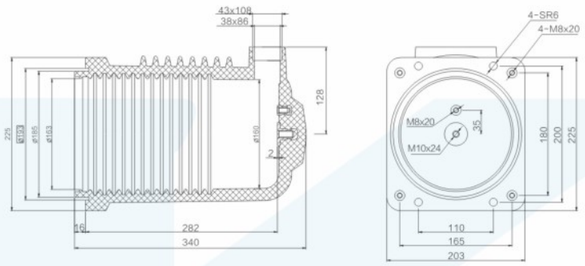

CHIN-24/255(630~1250A)（WT.508）

Technical parameters：

The rated voltage：24KV	Power frequency withstand voltage：65KV	Partial discharge≤3PC

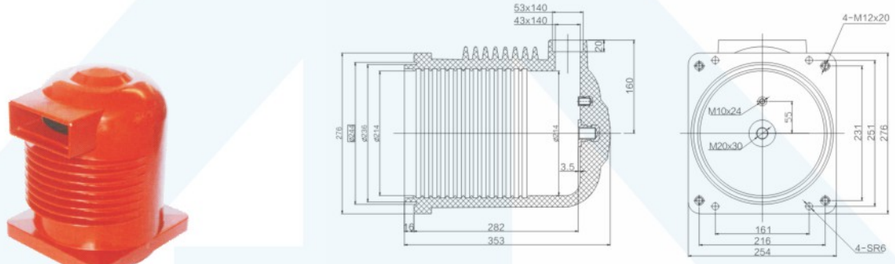

CH2N-24/176(1600~3150A)（WT.509）

Technical parameters：

The rated voltage：24KV	Power frequency withstand voltage：65KV	Partial discharge≤3PC

Contact box series

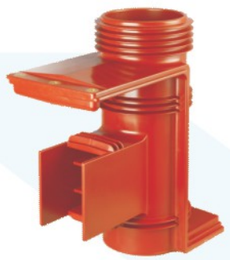

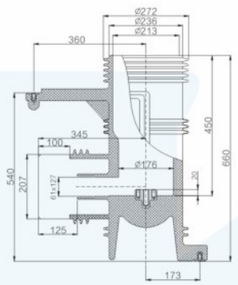

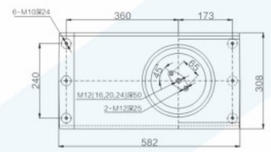

CH3N-40.5/660 （WT.510）

Technical parameters：

The rated voltage：40.5KV	Power frequency withstand voltage：95KV	Partial discharge≤3PC

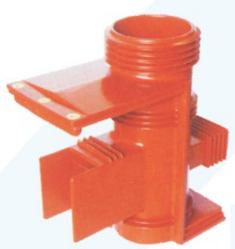

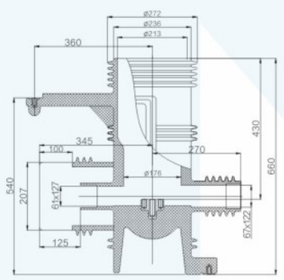

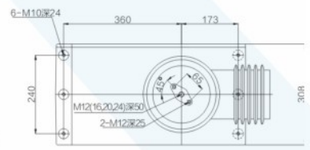

CH4N-40.5/660 （WT.511）

Technical parameters：

The rated voltage：40.5KV	Power frequency withstand voltage：95KV	Partial discharge≤3PC

兴机电器
XINGJI ELECTRICAL

Contact box series

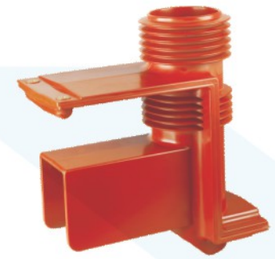

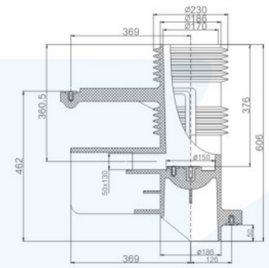

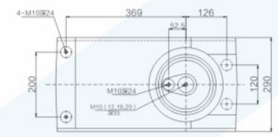

CH5N-40.5/606(ABB)（WT.512）

Technical parameters：

The rated voltage：40.5KV	Power frequency withstand voltage：95KV	Partial discharge≤3PC

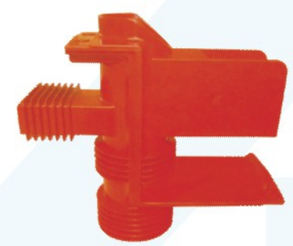

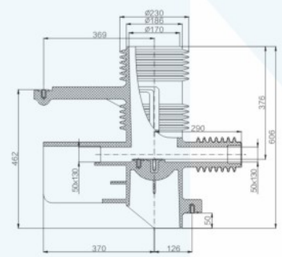

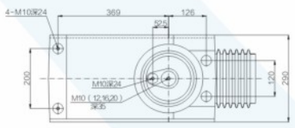

CH6N-40.5/606（ABB Three links）(WT.513)

Technical parameters：

The rated voltage：40.5KV	Power frequency withstand voltage：95KV	Partial discharge≤5PC

Contact box series

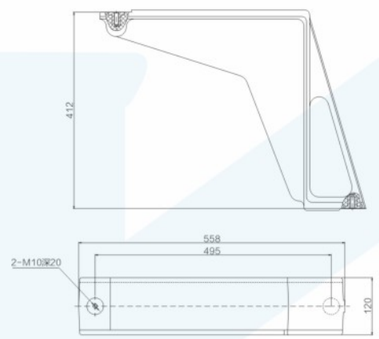

WB4-40.5(ABB)（WT.514）

Technical parameters：

The rated voltage：40.5KV	Power frequency withstand voltage：95KV	Partial discharge≤3PC

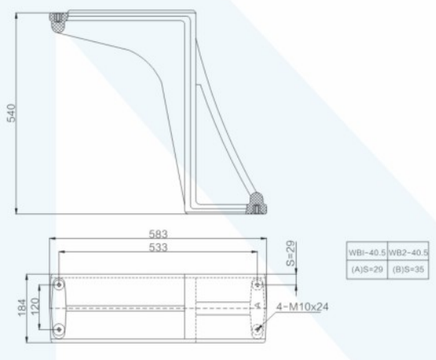

WB1~2-40.5/184(with 1.4m cabinet)（WT.515）

Technical parameters：

The rated voltage：40.5KV	Power frequency withstand voltage：95KV	Partial discharge≤3PC

Bushing series

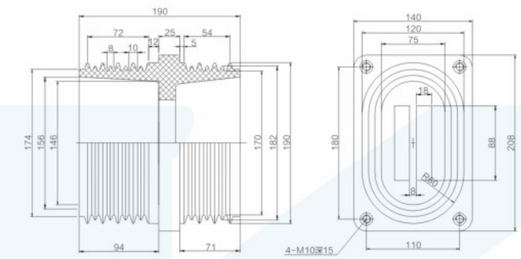

TGN-12/180x110x190（WT.601）

Busbar hole size：	50 x 6	68 x 15	88 x 18	108 x 20	108 x 20 x 2
Technical parameters：	The rated voltage：12KV	Power frequency withstand voltage：42KV	Partial discharge≤3PC		

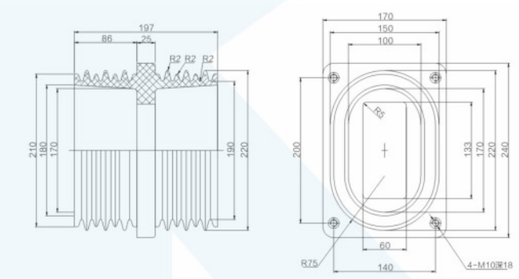

TGN-12/200x140x197（WT.602）

Busbar hole size：	88 x 18	108 x 118	128 x 16	132 x 60	108 x 20 x 2
Technical parameters：	The rated voltage：12KV	Power frequency withstand voltage：42KV	Partial discharge≤3PC		

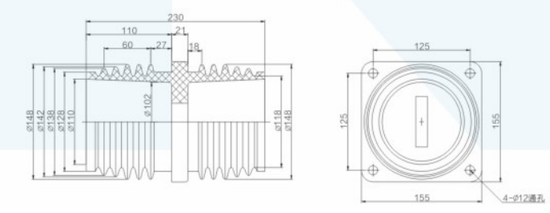

TGN-12/125x125x230（WT.603）

Busbar hole size：	45 x 5	60 x 6	65 x 5	85 x 15	68 x 12
Technical parameters：	The rated voltage：12KV	Power frequency withstand voltage：42KV	Partial discharge≤3PC		

Bushing series

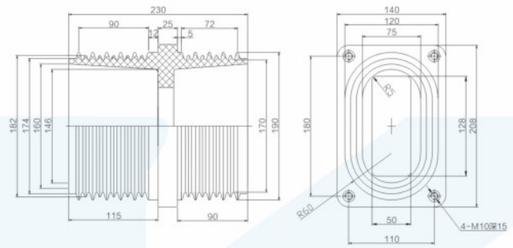

TGN-12/180x110x230（WT.605）

Busbar hole size：	65 x 15	88 x 18	108 x 20	108 x 20 x 2	128 x 20 x 2
Technical parameters：	The rated voltage：12KV	Power frequency withstand voltage：42KV	Partial discharge≤3PC		

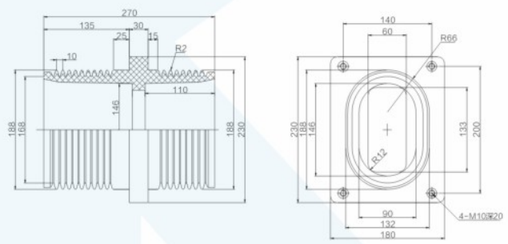

TGN-12/206x140x270（WT.606）

Busbar hole size：	88 x 18	108 x 36	108 x 56	128 x 56	133 x 60
Technical parameters：	The rated voltage：12KV	Power frequency withstand voltage：42KV	Partial discharge≤3PC		

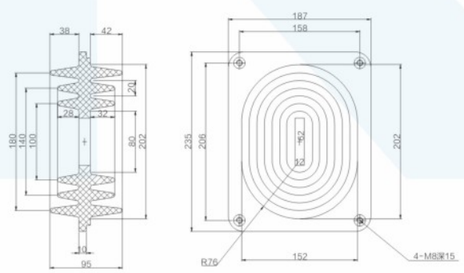

TGN-12/206x158x95（WT.607）

Busbar hole size:	62 x 12	68 x 12	68 x 16
Technical parameters：	The rated voltage：12KV	Power frequency withstand voltage：42KV	Partial discharge≤3PC

兴机电器
XINGJI ELECTRICAL

Bushing series

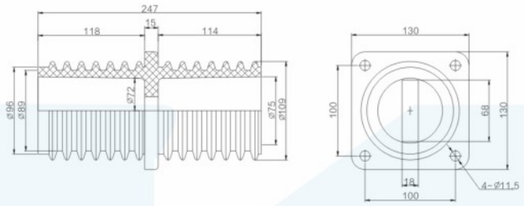

TGN-12/100x100x247（WT.608）

Busbar hole size：	48 x 18	50 x 15	62 x 10	68 x 12	68 x 18
Technical parameters：	The rated voltage：12KV	Power frequency withstand voltage：42KV	Partial discharge≤3PC		

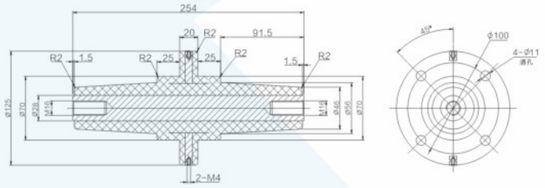

TGJ-12/125x254（WT.609）

Technical parameters：

The rated voltage：12KV	Power frequency withstand voltage：42KV	Partial discharge≤3PC

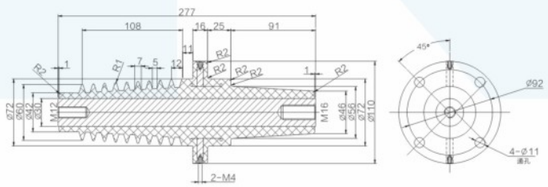

TGJ-12/110x277（WT.611）

Technical parameters：

The rated voltage：12KV	Power frequency withstand voltage：42KV	Partial discharge≤3PC

Bushing series

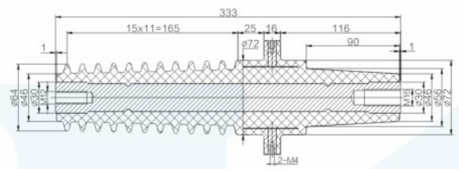

TGJ-24/110x333（WT.612）

Technical parameters：

The rated voltage：24KV	Power frequency withstand voltage：65KV	Partial discharge≤3PC

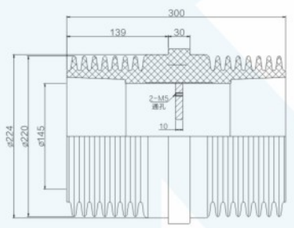

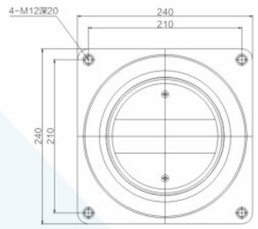

TG2N-24/210x210x300（WT.613）

Technical parameters：

The rated voltage：24KV	Power frequency withstand voltage：65KV	Partial discharge≤3PC

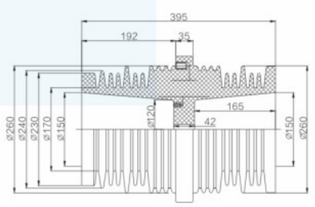

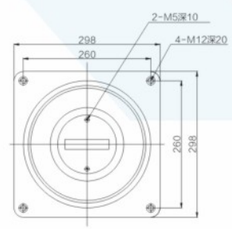

TG3N-40.5/260x260x395（WT.614）

Busbar hole size：	70 x 20	90 x 20	110 x 20	90 x 20 x 2	110 x 20 x 2

Technical parameters： The rated voltage：12KV	Power frequency withstand voltage：95KV	Partial discharge≤3PC

兴机电器
XINGJI ELECTRICAL

Bushing series

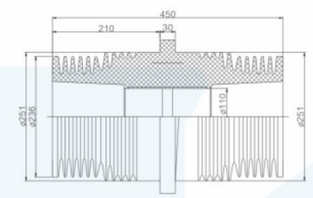

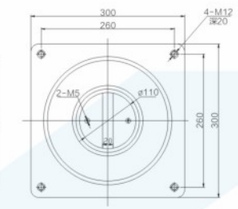

TG4N-40.5/260x260 x 450（WT.616）

Technical parameters：

The rated voltage：40.5KV	Power frequency withstand voltage：120KV	Partial discharge≤3PC

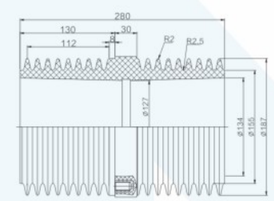

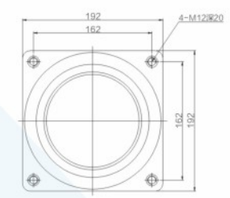

TG1N-24/162x162x280 （WT.617）

Technical parameters：

The rated voltage：24KV	Power frequency withstand voltage：65KV	Partial discharge≤3PC

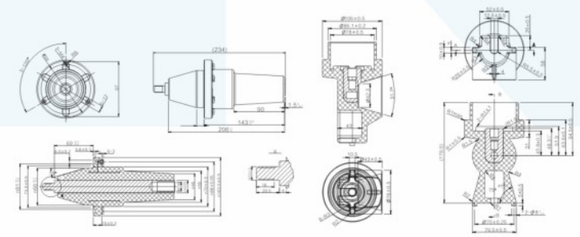

TGJ-12/234 Short cable cone and base

Technical parameters：

The rated voltage：12KV	Power frequency withstand voltage：42KV	Partial discharge≤3PC

Insulating parts

Bushing series

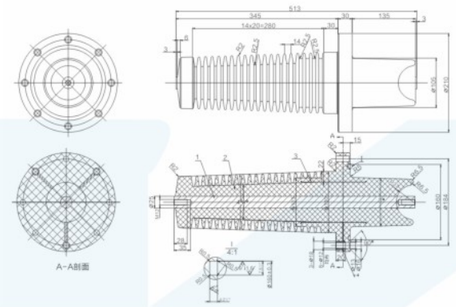

HXGT-40.5 bushing insulator (WT.622-1)

Technical parameters :

The rated voltage：40.5KV	Power frequency withstand voltage：95KV	Partial discharge≤3PC

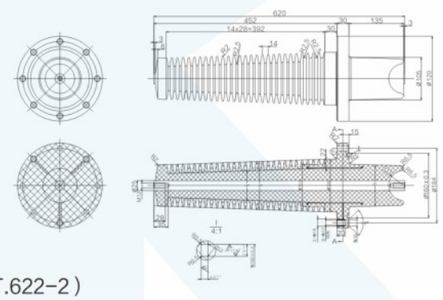

HXGT-40.5 Plateau type bushing insulator (WT.622-2)

Technical parameters :

The rated voltage：40.5KV	Power frequency withstand voltage：120KV	Partial discharge≤3PC

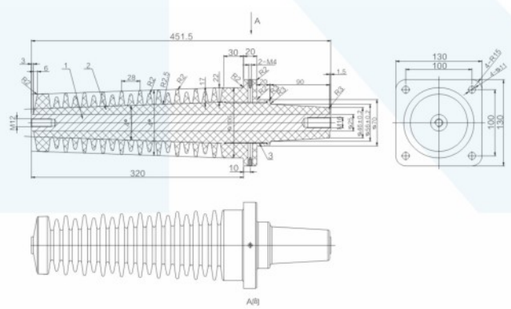

TGJ-40.5/130x130x451.5 （WT.623）

Technical parameters :

The rated voltage：40.5KV	Power frequency withstand voltage：95KV	Partial discharge≤3PC

兴机电器
XINGJI ELECTRICAL

Bushing series

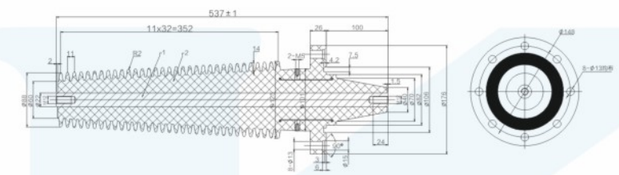

XG1-40.5 （WT.630-1）

Technical parameters :

The rated voltage：95KV	Power frequency withstand voltage：95KV	Partial discharge≤3PC

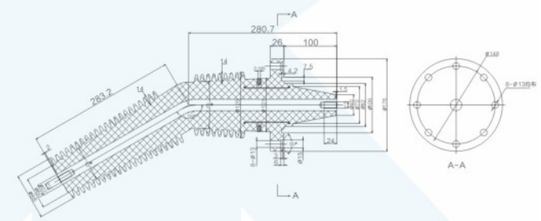

XG2-40.5 （WT.630-2）

Technical parameters :

The rated voltage：40.5KV	Power frequency withstand voltage：95KV	Partial discharge≤3PC

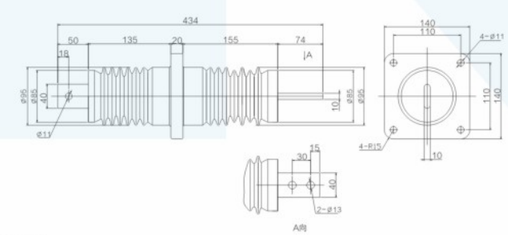

Small disconnecting switch sleeve （WT.632）

Technical parameters :

The rated voltage：12KV	Power frequency withstand voltage：42KV	Partial discharge≤3PC

VS1 Insulation tube

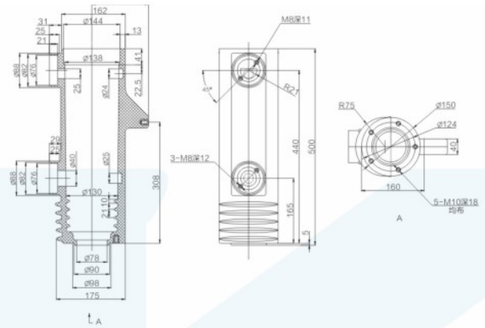

VS1-12/630~1250A（WT.701）

Technical parameters：

The rated voltage：12KV	Rated current：630~1250A	Power frequency withstand voltage：42KV	Partial discharge≤3PC

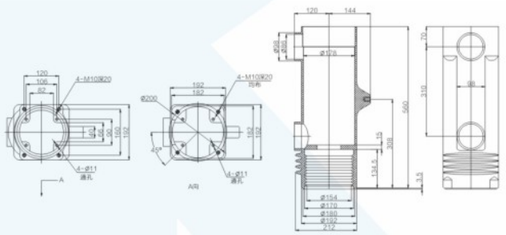

VS1-12/3150A（WT.702）

Technical parameters：

The rated voltage：12KV	Rated current：3150A	Power frequency withstand voltage：42KV	Partial discharge≤3PC

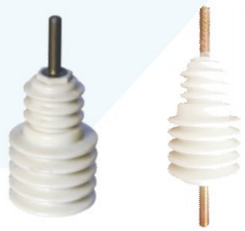

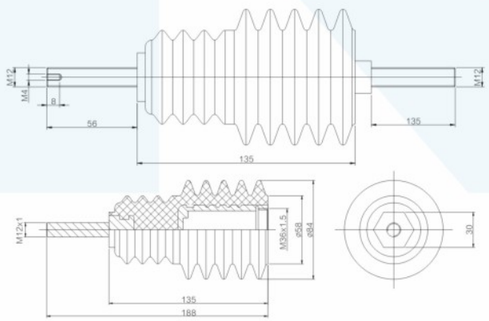

VS1-12 Insulation pull rod（WT.703）

Technical parameters：

The rated voltage：12KV	Power frequency withstand voltage：42KV	Partial discharge≤3PC

Contact head series

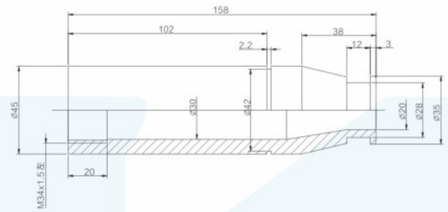

630A

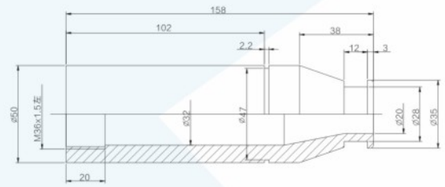

630A Contact head

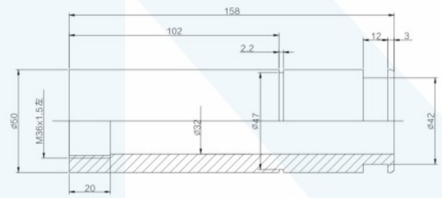

1250A Contact head

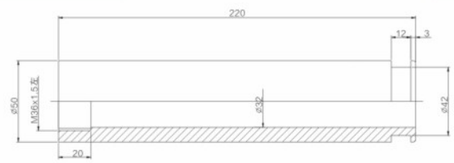

1250A Contact head